SITE PLAN
PANTHER WAY

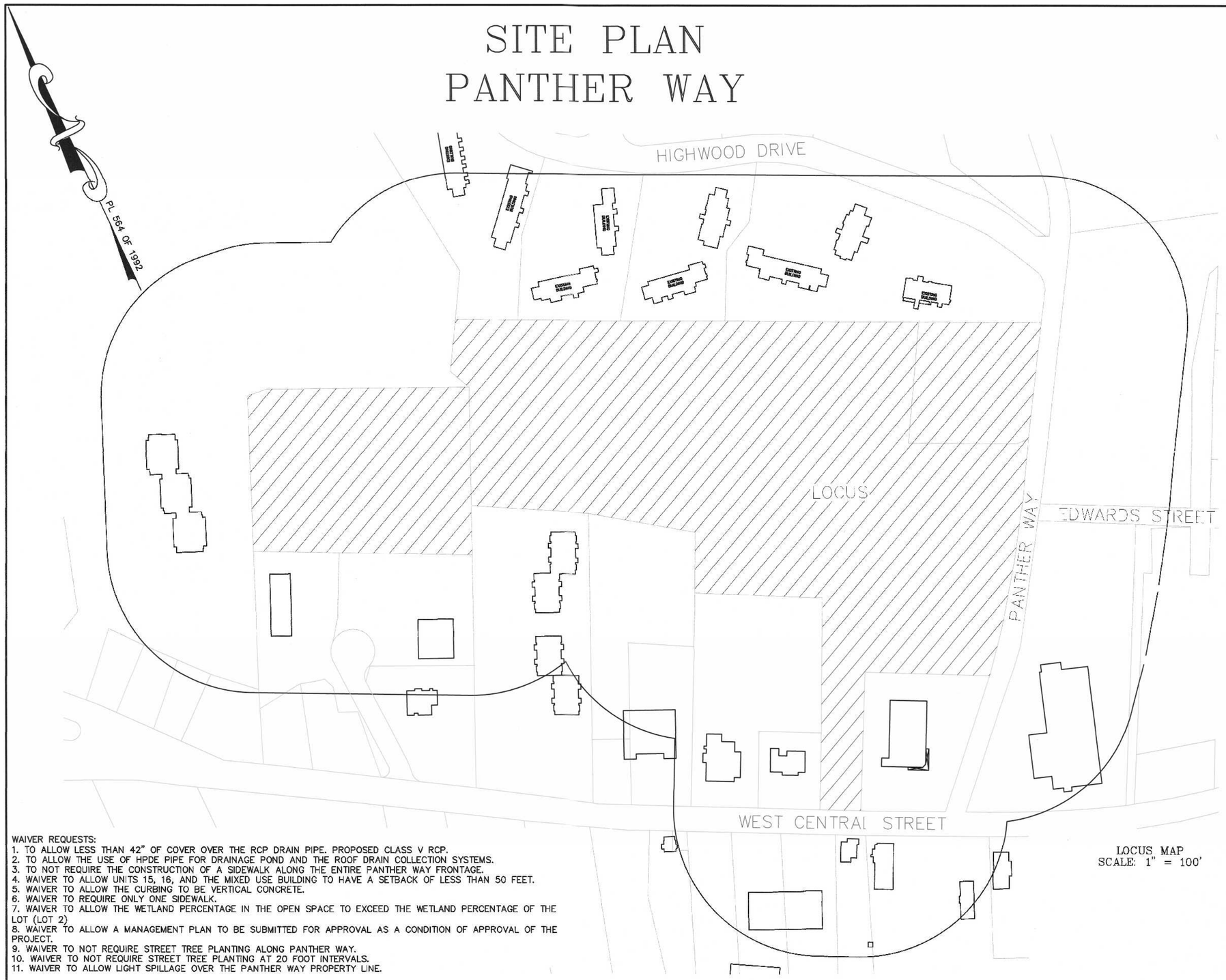

LOCUS MAP
SCALE: 1" = 100'

ZONING:

THE PROPERTY IS LOCATED WITHIN A COMMERCIAL II ZONE

	REQUIREMENTS:	EXISTING	PROPOSED
COMMERCIAL II			
AREA:	40,000 S.F.	800,948 ± S.F.	654,484 ± S.F.
FRONTAGE:	175'	722.56'	386.39'
DEPTH:	200'	1,150'+	1,150'+
HEIGHT:	3 STORIES – 40'	N/A	2 STORIES
WIDTH:	157.5'	714'+	356'+
COVERAGE –			
STRUCTURES:	70%	0%	13.2%
STRUC. & PAVING:	80%	0%	26.7%
SETBACKS–			
FRONT:	40'	0	200'
SIDE:	30'	0	30.5'
REAR:	30'	0	61'

THE PROPERTY IS NOT LOCATED WITHIN A FRANKLIN WATER RESOURCE DISTRICT.
THE PROPERTY IS NOT LOCATED WITHIN A ZONE A OR B BASED ON
FEMA FIRM MAP 25021C0308E DATED JULY 17, 2012.

NO BUILDINGS EXIST ON PROPOSED LOT 2.

SENIOR HOUSING AREA CRITERIA – SECTION 185–48.F(1)(c)
5 ACRES MINIMUM LOT SIZE – 654,484 SQ. FT. OR 15.02 ACRES PROPOSED (LOT 2)
REQUIRED OPEN SPACE 30% OF LOT AREA – 196,345 SQ. FT. OR 4.51 ACRES
OPEN SPACE PROPOSED (LOT 2) – 220,468 SQ. FT. OR 5.06 ACRES
WETLAND AREA WITHIN OPEN SPACE – 22,983± SQ. FT. OR 3.5% OF ORIGINAL AREA (LOT 2)
THE ENTIRE WETLAND IS PROPOSED TO BE WITHIN THE OPEN SPACE – WAIVER REQUESTED
TO ALLOW A GRATER PERCENTAGE OF WETLAND WITIN THE OPEN SPACE THAN WITHIN THE
ORIGINAL LOT. THE OPEN SPACE CONTAINS UPLAND THAT IS 30.2 PERCENT OF THE
ORIGINAL PARCEL (LOT 2)

DRAWING INDEX:

COVER SHEET – 1
EXISTING CONDITIONS PLANS 2 & 3
SITE LAYOUT PLANS 4 & 5
SITE GRADING AND UTILITY PLANS 6 & 7
DRIVWAY AND SEWER PLAN AND PRFILES 8 – 10
SITE PLANTING PLAN 11
EROSION CONTROL PLANS 12 & 13
CONSTRUCTION DETAILS 14 – 17

REFERENCES:
DEED BOOK 37290 PAGE 474
DEED BOOK 37152 PAGE 343
DEED BOOK 5602 PAGE 614
DEED BOOK 5804 PAGE 316
DEED BOOK 5844 PAGE 87
DEED BOOK 5924 PAGE 180
DEED BOOK 9471 PAGE 641
DEED BOOK 10499 PAGE 680
DEED BOOK 11341 PAGE 545
PLAN 565 OF 1970
PLAN 386 OF 1979
PLAN 92 OF 1979
PLAN 564 OF 1992
PLANS 261 A – C OF 1994
PLAN 921 OF 1980
COUNTY ENGINEERS PLAN FOR EDWARD STREET
LAST REVISED AUG. 28, 2000
SITE PLAN FOR "THREE" RESTAURANT LAST REVISED 10–17–06
PLAN OF LAND BY PAUL ROBINSON DATED NOVEMBER 14, 1978
PLAN OF KNIGHTS OF COLUMBUS LAST REVISED 3–8–2000
PLAN 1062 OF 1972
PLAN 901 OF 1974

WAIVER REQUESTS:
1. TO ALLOW LESS THAN 42" OF COVER OVER THE RCP DRAIN PIPE. PROPOSED CLASS V RCP.
2. TO ALLOW THE USE OF HPDE PIPE FOR DRAINAGE POND AND THE ROOF DRAIN COLLECTION SYSTEMS.
3. TO NOT REQUIRE THE CONSTRUCTION OF A SIDEWALK ALONG THE ENTIRE PANTHER WAY FRONTAGE.
4. WAIVER TO ALLOW UNITS 15, 16, AND THE MIXED USE BUILDING TO HAVE A SETBACK OF LESS THAN 50 FEET.
5. WAIVER TO ALLOW THE CURBING TO BE VERTICAL CONCRETE.
6. WAIVER TO REQUIRE ONLY ONE SIDEWALK.
7. WAIVER TO ALLOW THE WETLAND PERCENTAGE IN THE OPEN SPACE TO EXCEED THE WETLAND PERCENTAGE OF THE LOT (LOT 2)
8. WAIVER TO ALLOW A MANAGEMENT PLAN TO BE SUBMITTED FOR APPROVAL AS A CONDITION OF APPROVAL OF THE PROJECT.
9. WAIVER TO NOT REQUIRE STREET TREE PLANTING ALONG PANTHER WAY.
10. WAIVER TO NOT REQUIRE STREET TREE PLANTING AT 20 FOOT INTERVALS.
11. WAIVER TO ALLOW LIGHT SPILLAGE OVER THE PANTHER WAY PROPERTY LINE.

OWNERS:
MAP 270 PARCELS 28 & 38
PANTHER WAY 2019 LLC
7 MYRTLE STREET
NORFOLK, MASSACHUSETTS

MAP 270 PARCEL 39
HOLMES LAND TRUST
12 MYRTLE STREET
NORFOLK, MASSACHUSETTS

APPLICANT:
CAMFORD PROPERTY GROUP, INC
37 EAST CENTRAL STREET
FRANKLIN, MASSACHUSETTS

COVER SHEET
PANTHER WAY
FRANKLIN, MASSACHUSETTS
PREPARED FOR
CAMFORD PROPERTY GROUP, INC.
37 EAST CENTRAL STREET
FRANKLIN, MASSACHUSETTS
NOVEMBER 8, 2024
SCALE: 1" = 100'

SITE PLAN APPROVAL
REQUIRED
FRANKLIN PLANNING BOARD

DATE

GRAPHIC SCALE
100 0 50 100 200 400
(IN FEET)
1 inch = 100 ft.

NO.	DATE	DESCRIPTION	BY
1	6/20/25	REVIEW COMMENTS	RRG

COMMONWEALTH OF MASSACHUSETTS
CARLOS A. QUINTAL
CIVIL
No. 30812
REGISTERED PROFESSIONAL ENGINEER

CARLOS A. QUINTAL P.E. #30812

DATE		INT.
12/18	FIELD BY:	BL
BK#	FIELD BOOK	PG#
12/24	CALCS BY:	RRG
12/24	DESIGNED BY:	RRG
12/24	DRAWN BY:	COMP
12/24	CHECKED BY:	CAQ

UNITED CONSULTANTS INC.
850 FRANKLIN STREET SUITE 11D
WRENTHAM, MASSACHUSETTS 02093
508–384–6560 FAX 508–384–6566

DATE: DEC. 13, 2024
SCALE: 1" = 100'
PROJECT: UC1378
SHEET: 1 OF 17

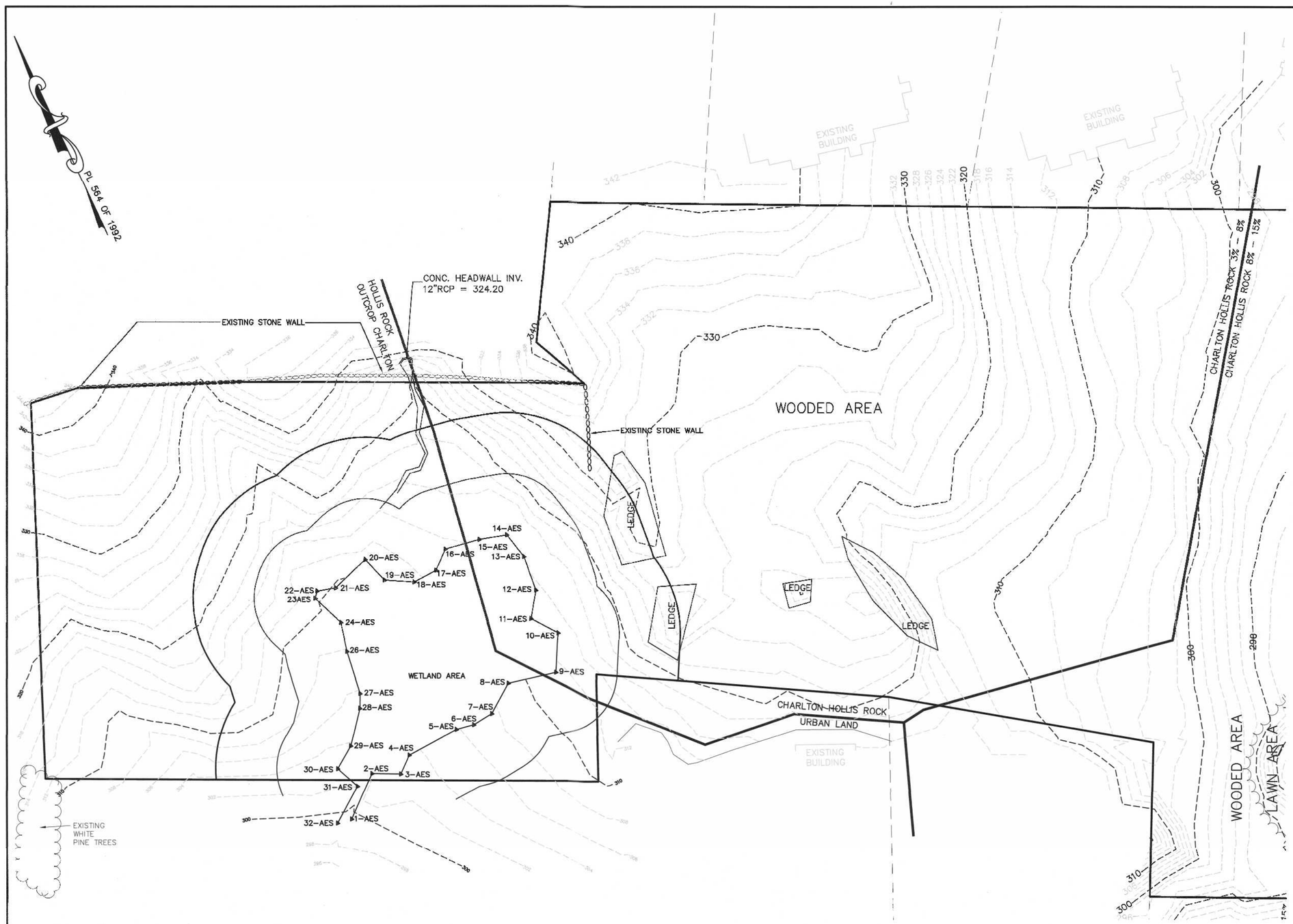

VEGETATIVE COVER CONDITIONS

CULTIVATED LAND – NONE PRESENT
MEADOW – NONE PRESENT
PASTURE – NONE PRESENT
WOODLAND – LABELED WOODED AREA WHICH CONTINUE TO THE PROPERTY LINE
WETLAND – LABELED WETLAND AREA
TREES WITH A DIAMETER AT BREAST HEIGHT (DBH) IN EXCESS OF 15 INCHES – TREES WITH A DBH OF 15 INCHES OR GRATER AREA LOCATED WITHIN THE WOODED AREA.
ACTUAL CANOPY LINE OF EXISTING TREES AND WOODLANDS – THE TREE CANOPY LINE SEPARATING THE WOODED AREAS FROM THE LAWN AREAS HAVE BEEN ADDED AND LABELED.

HISTORICALLY SIGNIFICANT SITES OR STRUCTURES

CELLAR HOLES – NO HISTORICAL CELLAR HOLES EXIST ON THE SITE
STONE WALLS – SHOWN
EARTHWORK – EXTENTS OF EARTHWORK FOR THE 100 PANTHER WAY SITE ARE SHOWN AS THE WOODED AREA – GRASS AREA LINE.
GRAVES – NO VISIBLE GRAVES EXIST ON THE SITE

TEST PITS DECEMBER 2023

TEST PIT	GROUND ELEVATION	BOTTOM EXCAVATION
1–25	287.0±	276.0 (WATER AT 276.0)±
3–0	306.06	297.9 (WATER AT 300.06)
4–0	310.81	300.31 (WATER AT 306.81)
5–0	325.10	322.10 FRACTURED ROCK
6–0	326.60	322.60 REFUSAL
7–50	329.24	319.91 (WATER AT 321.74)
3–0N	275.92	263.92 S & G
4–0N	288.41	277.16 ROCK
5–0N	290.36	278.36 S & G
8–0N	316.50	312.50 REFUSAL
9–0N	329.29	325.29 REFUSAL
10–0N	328.43	322.43 REFUSAL

EXISTING CONDITIONS PLAN – 1
SENIOR VILLAGE
PANTHER WAY
FRANKLIN, MASSACHUSETTS
PREPARED FOR
CAMFORD PROPERTY GROUP, INC.
37 EAST CENTRAL STREET
FRANKLIN, MASSACHUSETTS
DECEMBER 13, 2024
SCALE: 1" = 40'

SITE PLAN APPROVAL
REQUIRED
FRANKLIN PLANNING BOARD

DATE

GRAPHIC SCALE
40 0 20 40 80 160
(IN FEET)
1 inch = 40 ft.

NO.	DATE	DESCRIPTION	BY
1	6/20/25	REVIEW COMMENTS	RRG

COMMONWEALTH OF MASSACHUSETTS
ANDREW C. MURPHY
No. 35042
PROFESSIONAL LAND SURVEYOR
7/3/25
ANDREW C. MURPHY P.L.S. #35042

DATE		INT.
	FIELD BY:	
BK#	FIELD BOOK	PG#
12/24	CALCS BY:	RRG
12/24	DESIGNED BY:	RRG
12/24	DRAWN BY:	COMP
12/24	CHECKED BY:	CAQ

UNITED CONSULTANTS INC.
850 FRANKLIN STREET SUITE 11D
WRENTHAM, MASSACHUSETTS 02093
508-384-6560 FAX 508-384-6566

DATE DEC. 13, 2024
SCALE 1" = 40'
PROJECT UC1378
SHEET 2 OF 17

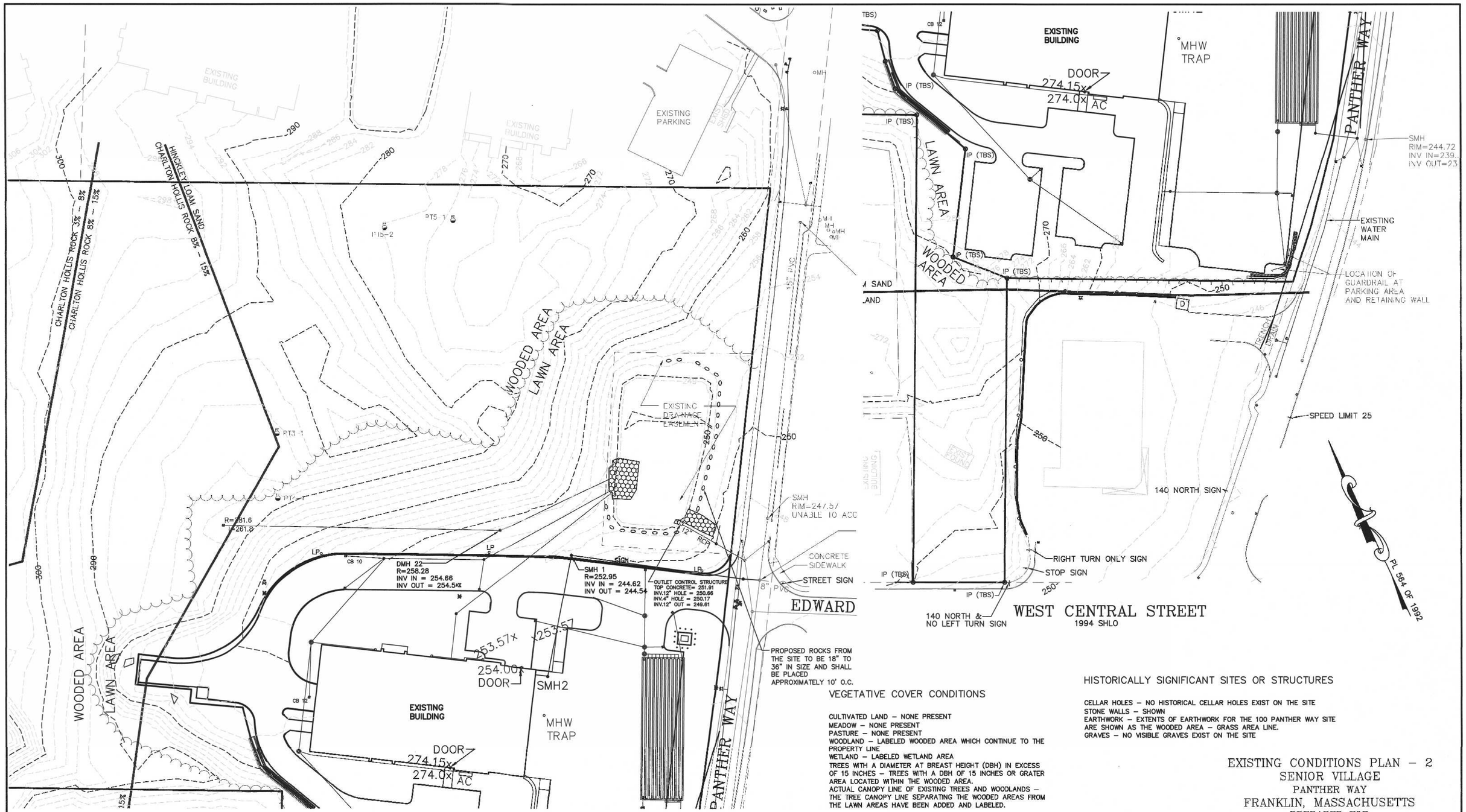

VEGETATIVE COVER CONDITIONS

CULTIVATED LAND – NONE PRESENT
MEADOW – NONE PRESENT
PASTURE – NONE PRESENT
WOODLAND – LABELED WOODED AREA WHICH CONTINUE TO THE PROPERTY LINE
WETLAND – LABELED WETLAND AREA
TREES WITH A DIAMETER AT BREAST HEIGHT (DBH) IN EXCESS OF 15 INCHES – TREES WITH A DBH OF 15 INCHES OR GRATER AREA LOCATED WITHIN THE WOODED AREA.
ACTUAL CANOPY LINE OF EXISTING TREES AND WOODLANDS – THE TREE CANOPY LINE SEPARATING THE WOODED AREAS FROM THE LAWN AREAS HAVE BEEN ADDED AND LABELED.

HISTORICALLY SIGNIFICANT SITES OR STRUCTURES

CELLAR HOLES – NO HISTORICAL CELLAR HOLES EXIST ON THE SITE
STONE WALLS – SHOWN
EARTHWORK – EXTENTS OF EARTHWORK FOR THE 100 PANTHER WAY SITE ARE SHOWN AS THE WOODED AREA – GRASS AREA LINE.
GRAVES – NO VISIBLE GRAVES EXIST ON THE SITE

EXISTING CONDITIONS PLAN – 2
SENIOR VILLAGE
PANTHER WAY
FRANKLIN, MASSACHUSETTS
PREPARED FOR
CAMFORD PROPERTY GROUP, INC.
37 EAST CENTRAL STREET
FRANKLIN, MASSACHUSETTS
DECEMBER 13, 2024
SCALE: 1" = 40'

SITE PLAN APPROVAL
REQUIRED
FRANKLIN PLANNING BOARD

DATE

GRAPHIC SCALE
40 0 20 40 80 160
(IN FEET)
1 inch = 40 ft.

NO.	DATE	DESCRIPTION	BY
1	6/20/25	REVIEW COMMENTS	RRG

COMMONWEALTH OF MASSACHUSETTS ANDREW C. MURPHY No. 35042 PROFESSIONAL LAND SURVEYOR
7/3/25
ANDREW C. MURPHY P.L.S. #35042

DATE		INT.
	FIELD BY:	
BK#	FIELD BOOK	PG#
12/24	CALCS BY:	RRG
12/24	DESIGNED BY:	RRG
12/24	DRAWN BY:	COMP
12/24	CHECKED BY:	CAQ

UNITED CONSULTANTS INC.
850 FRANKLIN STREET SUITE 11D
WRENTHAM, MASSACHUSETTS 02093
508-384-6560 FAX 508-384-6566

DATE: DEC. 13, 2024
SCALE: 1" = 40'
PROJECT: UC1378
SHEET: 3 OF 17

ZONING:

THE PROPERTY IS LOCATED WITHIN A COMMERCIAL II ZONE

	REQUIREMENTS:	EXISTING	PROPOSED
COMMERCIAL II			
AREA:	40,000 S.F.	800,948 ± S.F.	654,484 ± S.F.
FRONTAGE:	175'	722.56'	386.39'
DEPTH:	200'	1,150'+	1,150'+
HEIGHT:	3 STORIES – 40'	N/A	2 STORIES
WIDTH:	157.5'	714'+	356'+
COVERAGE –			
STRUCTURES:	70%	0%	13.2%
STRUC. & PAVING:	80%	0%	26.7%
SETBACKS–			
FRONT:	40'	0	200'
SIDE:	30'	0	30.5'
REAR:	30'	0	61'

UNIT COUNT:
UNITS 1 THROUGH 8 AND 17 THROUGH 26 ARE DUPLEX BUILDINGS
UNITS 9 THROUGH 16 ARE SINGLE FAMILY HOMES
MIXED USE BUILDING HAS 18 RESIDENTIAL UNITS
44 TOTAL UNITS PROPOSED

OPEN SPACE:
TOTAL AREA – 654,484± SQ. FT.
OPEN SPACE – 220,468 SQ. FT.

PERCENTAGE OF OPEN SPACE – 33.7%

THE PROPERTY IS NOT LOCATED WITHIN A FRANKLIN WATER RESOURCE DISTRICT.
THE PROPERTY IS NOT LOCATED WITHIN A ZONE A OR B BASED ON FEMA FIRM MAP 2502100308E DATED JULY 17, 2012.
FINAL LOCATION TO
NO BUILDINGS EXIST ON PROPOSED LOT 2.
EXISTING TREES. MINIMIZE
TREE REMOVAL.

SINGLE FAMILY UNIT AND DUPLEX UNITS SHALL HAVE TWO GARAGE PARKING SPACES AND TWO VISITOR PARKING SPACES FOR EACH UNIT.

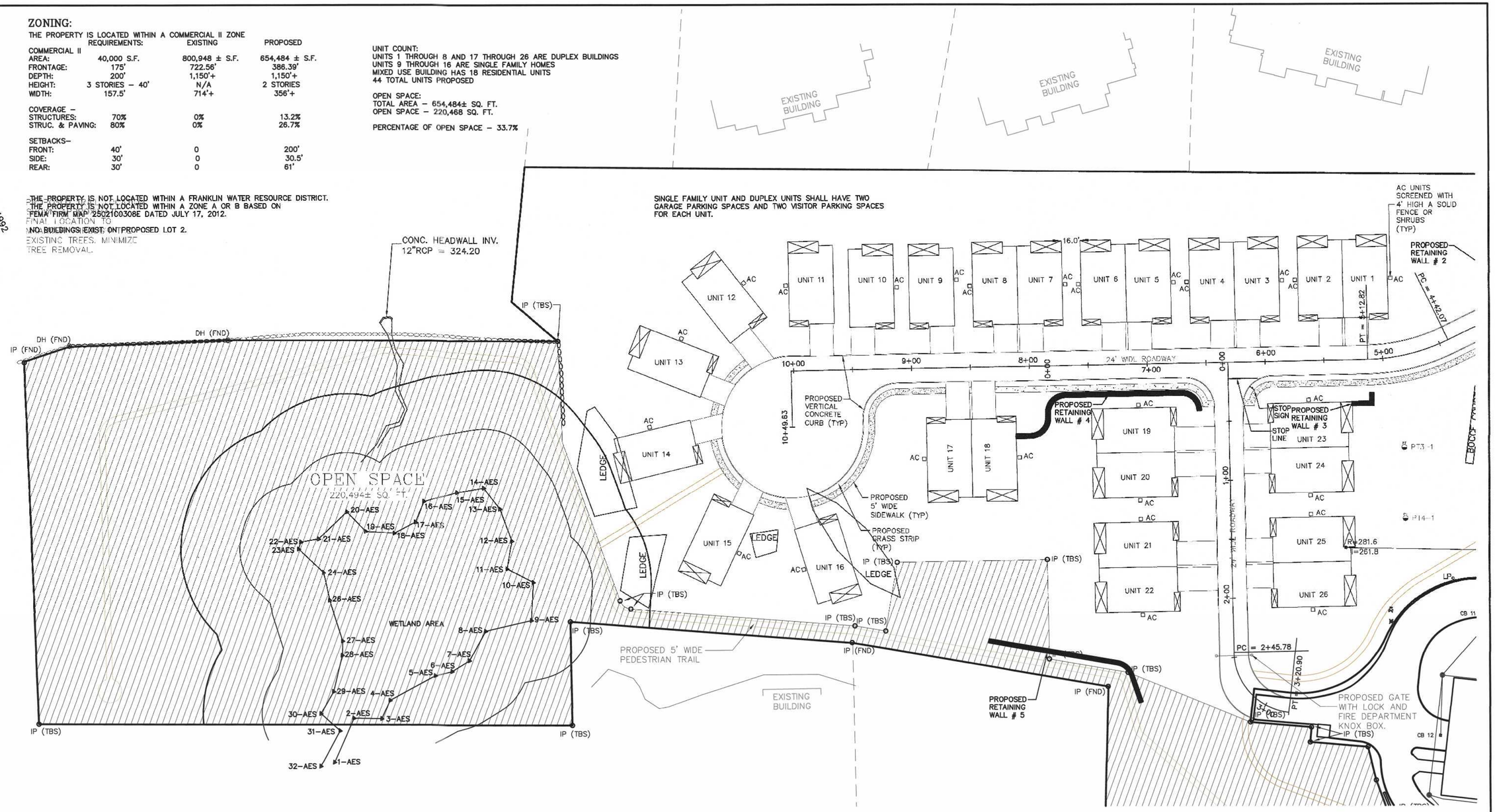

TEST PITS DECEMBER 2023

TEST PIT	GROUND ELEVATION	BOTTOM EXCAVATION	
1–25	287.0±	276.0	(WATER AT 276.0)±
3–0	306.06	297.9	(WATER AT 300.06)
4–0	310.81	300.31	(WATER AT 306.81)
5–0	325.10	322.10	FRACTURED ROCK
6–0	326.60	322.60	REFUSAL
7–50	329.24	319.91	(WATER AT 321.74)
3–0N	275.92	263.92	S & G
4–0N	288.41	277.16	ROCK
5–0N	290.36	278.36	S & G
8–0N	316.50	312.50	REFUSAL
9–0N	329.29	325.29	REFUSAL
10–0N	328.43	322.43	REFUSAL

OWNERS:
MAP 270 PARCELS 28 & 38
PANTHER WAY 2019 LLC
7 MYRTLE STREET
NORFOLK, MASSACHUSETTS

MAP 270 PARCEL 39
HOLMES LAND TRUST
12 MYRTLE STREET
NORFOLK, MASSACHUSETTS

APPLICANT:
CAMFORD PROPERTY GROUP, INC
37 EAST CENTRAL STREET
FRANKLIN, MASSACHUSETTS

PROJECT NARRATIVE DESCRIPTION

THE PROPOSED SENIOR VILLAGE WILL INCLUDE 44 HOUSING UNITS WHICH WILL BE DISPERSED WITHIN SINGLE UNIT BUILDING, TWO UNIT BUILDINGS AND 18 UNITS WILL BE LOCATED IN A MIXED USE BUILDING. A COMMERCIAL SPACE IS ALSO PROPOSED WITHIN THE MIXED USE BUILDING ALONG WITH A COMMUNITY CLUB HOUSE SPACE. THIS WILL EQUATE TO ONE HOUSING UNIT PER 0.34 ACRES. THE PROPOSED PROJECT IS INTENDED TO COMPLY WITH ALL OF THE TOWN OF FRANKLIN ZONING AND OTHER LAND USE REGULATIONS. THE PROPOSED CONSTRUCTION OF THE BUILDING WILL INCLUDE CONCRETE FOUNDATIONS AND WOOD FRAMED STRUCTURES. NO BUILDING DEMOLITION IS PROPOSED. THE PROJECT WILL ALLOW FOR RESIDENTIAL, CLUB HOUSE, AND A COMMERCIAL USE TO BE DETERMINED. IT IS ANTICIPATED THAT THE RESIDENTIAL UNIT WILL HAVE ONE OR TWO OCCUPANTS. THE COMMERCIAL SPACE WILL PROVIDE FOR EMPLOYMENT OPPORTUNITIES AND THE NUMBER OF EMPLOYEES WILL BE DETERMINED ONCE A TENANT IS SECURED. THE RESIDENTIAL UNITS WILL BE AVAILABLE FOR OCCUPANCY TWENTY FOUR HOURS A DAY. THE COMMERCIAL SPACE HOURS OF OPERATION WILL BE DETERMINED ONCE A TENANT IS SECURES.

LAYOUT PLAN – 1
SENIOR VILLAGE
PANTHER WAY
FRANKLIN, MASSACHUSETTS
PREPARED FOR
CAMFORD PROPERTY GROUP, INC.
37 EAST CENTRAL STREET
FRANKLIN, MASSACHUSETTS
DECEMBER 13, 2024
SCALE: 1" = 40'

SITE PLAN APPROVAL
REQUIRED
FRANKLIN PLANNING BOARD

DATE

GRAPHIC SCALE
40 0 20 40 80 160
(IN FEET)
1 inch = 40 ft.

NO.	DATE	DESCRIPTION	BY
1	6/20/25	REVIEW COMMENTS	RRG

CARLOS A. QUINTAL CIVIL No. 30812
CARLOS A. QUINTAL P.E. #30812

DATE		INT.
	FIELD BY:	
BK#	FIELD BOOK	PG#
12/24	CALCS BY:	RRG
12/24	DESIGNED BY:	RRG
12/24	DRAWN BY:	COMP
12/24	CHECKED BY:	CAQ

UNITED CONSULTANTS INC.
850 FRANKLIN STREET SUITE 11D
WRENTHAM, MASSACHUSETTS 02093
508-384-6560 FAX 508-384-6566

DATE: DEC. 13, 2024
SCALE: 1" = 40'
PROJECT: UC1378
SHEET: 4 OF 17

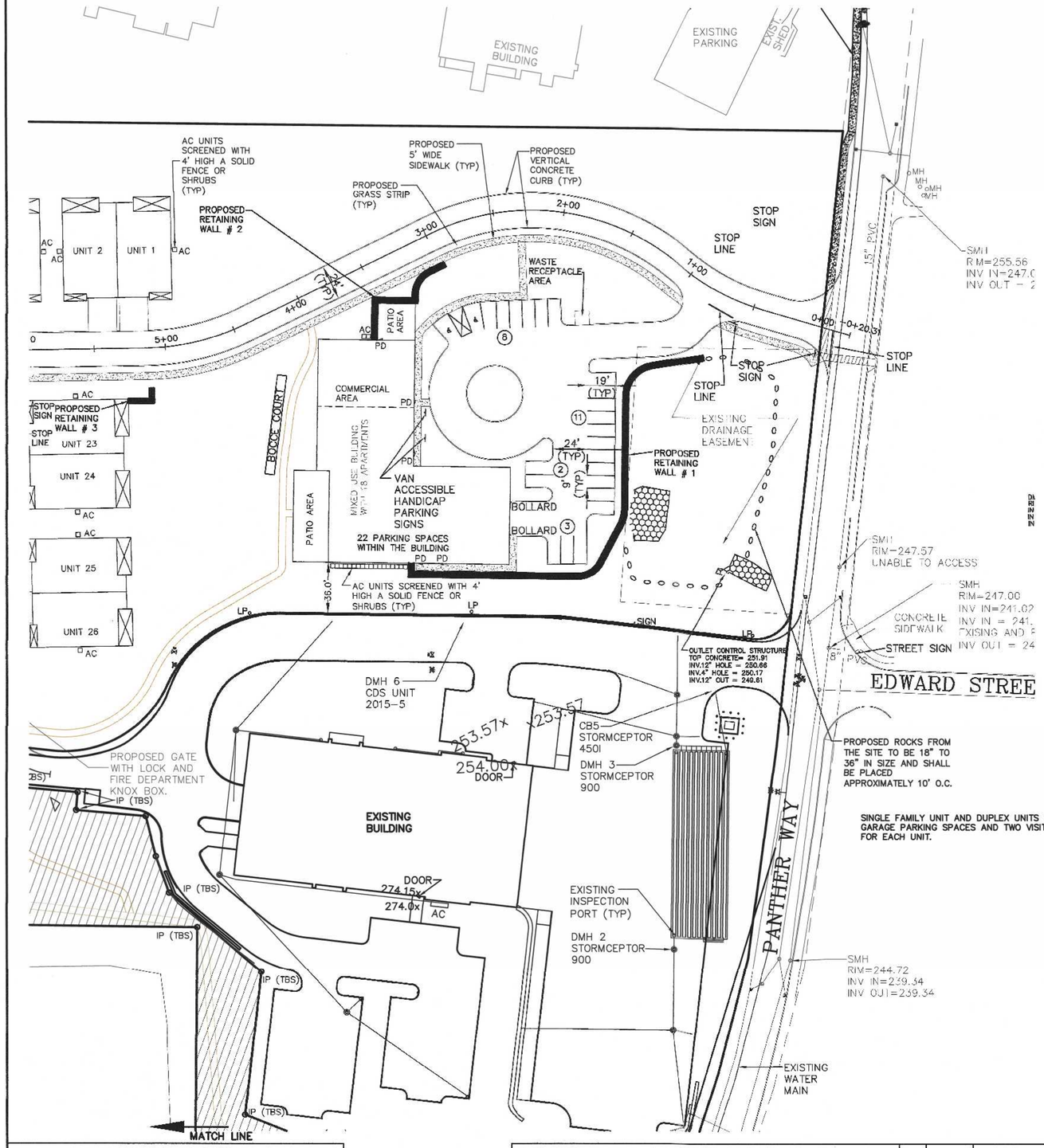

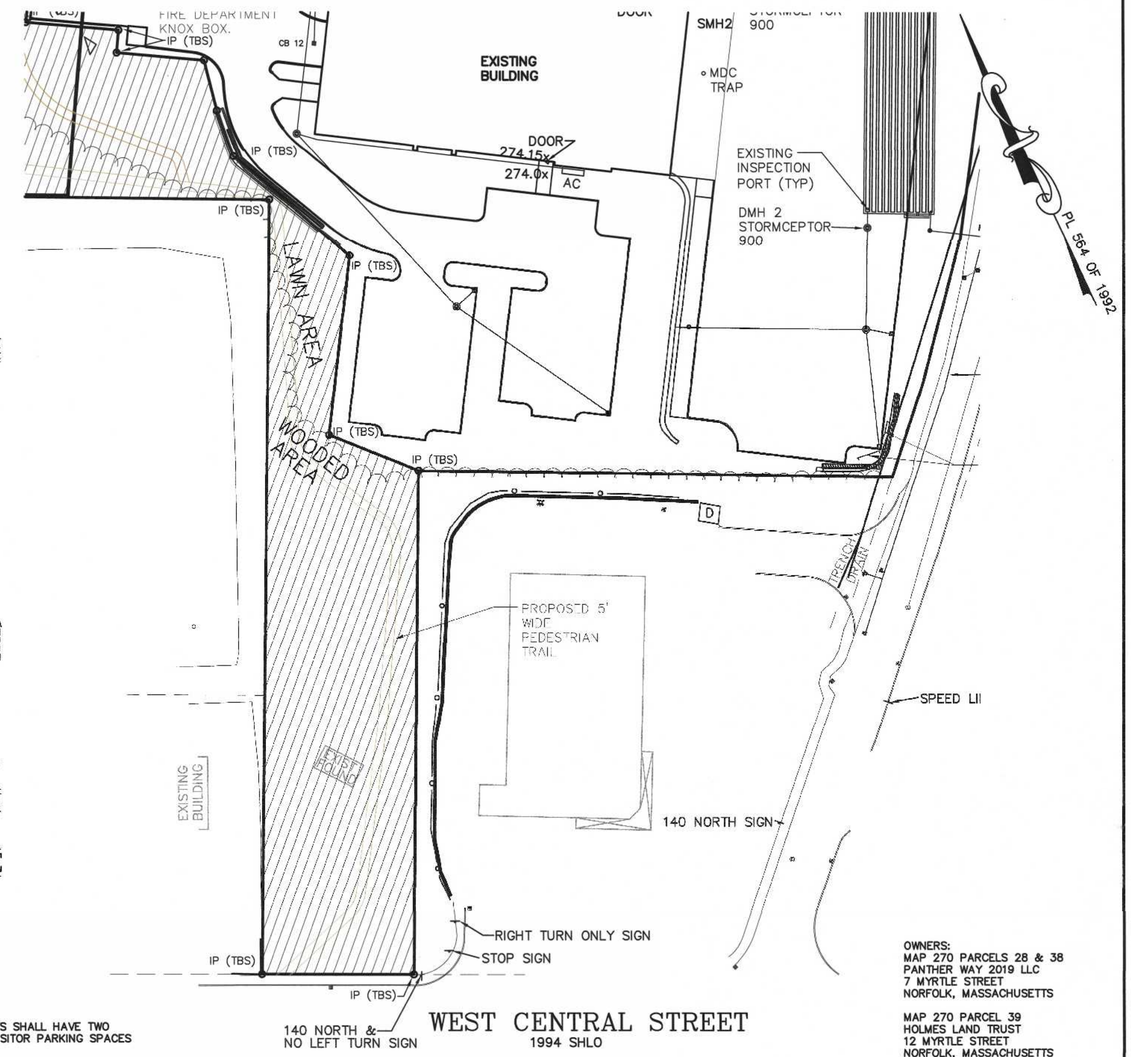

SINGLE FAMILY UNIT AND DUPLEX UNITS SHALL HAVE TWO GARAGE PARKING SPACES AND TWO VISITOR PARKING SPACES FOR EACH UNIT.

OWNERS:
MAP 270 PARCELS 28 & 38
PANTHER WAY 2019 LLC
7 MYRTLE STREET
NORFOLK, MASSACHUSETTS

MAP 270 PARCEL 39
HOLMES LAND TRUST
12 MYRTLE STREET
NORFOLK, MASSACHUSETTS

APPLICANT:
CAMFORD PROPERTY GROUP, INC
37 EAST CENTRAL STREET
FRANKLIN, MASSACHUSETTS

PARKING SCHEDULE

UNIT 1 THROUGH UNIT 26
2 SPACES PER UNIT
TWO GARAGE SPACES PROVIDED PER UNIT.
TWO VISITOR SPACES ARE AVAILABLE IN THE UNIT DRIVEWAYS.

MIXED USE BUILDING
18 RESIDENTIAL UNITS
2 SPACES PER UNIT
COMMERCIAL SPACE 1 SAPCE PER 400 SQ. FT.
3,196 SQ. FT – 8 SPACES
44 SPACES REQUIRED
46 SPACES PROPOSED

COMMERCAIL SPACE AREA CALCULATION

SINGLE FAMILY UNITS AND DUPLEX UNITS – 2,307 SQ. FT.

MIXED USE BUILDING – 40,772 SQ. FT.
WHICH EXCLUDES THE COMMERCAIL SPACE AREA

59.982 + 40,772 = 100,754 SQ. FT.

100,754 X 0.05 = 5,037 SQ. FT.

COMMERCIAL SPACE IS 3,196 SQ. FT. OR 3.2 PERCENT

NOTE: GARAGE SPACES ARE INCLUDED IN THIS CALCULATION

LAYOUT PLAN – 2
SENIOR VILLAGE
PANTHER WAY
FRANKLIN, MASSACHUSETTS
PREPARED FOR
CAMFORD PROPERTY GROUP, INC.
37 EAST CENTRAL STREET
FRANKLIN, MASSACHUSETTS
DECEMBER 13, 2024
SCALE: 1" = 40'

SITE PLAN APPROVAL
REQUIRED
FRANKLIN PLANNING BOARD

DATE

GRAPHIC SCALE
40 0 20 40 80 160
(IN FEET)
1 inch = 40 ft.

NO.	DATE	DESCRIPTION	BY
1	6/20/25	REVIEW COMMENTS	RRG

CARLOS A. QUINTA CIVIL No. 30812 REGISTERED PROFESSIONAL ENGINEER FRANKLIN, MASSACHUSETTS
CARLOS A. QUINTAL P.E. #30812

DATE		INT.
	FIELD BY:	
BK#	FIELD BOOK	PG#
12/24	CALCS BY:	RRG
12/24	DESIGNED BY:	RRG
12/24	DRAWN BY:	COMP
12/24	CHECKED BY:	CAQ

UNITED CONSULTANTS INC.
850 FRANKLIN STREET SUITE 11D
WRENTHAM, MASSACHUSETTS 02093
508-384-6560 FAX 508-384-6568

DATE DEC. 13, 2024
SCALE 1" = 40'
PROJECT UC1378
SHEET 5 OF 17

SOIL TESTING INFORAMTION

PERMEABILITY TEST 3-1 – ELEVATION = 285.6
0 – 12" A SANDY LOAM ELEV. = 284.6
12" – 40" B SANDY LOAM 10YR 4/4 ELEV. = 282.27
40" – 144" C1 LOAMY SAND AND GRAVEL 2.5Y 6/3 ELEV = 273.6
144" – 180" C2 LOAMY SAND AND GRAVEL W/12" ROCK ELEV = 270.6
PERMEABILITY RATE – 52.86 IN/HR

PERMEABILITY TEST 4-1 – ELEVATION = 282.0
0 – 9" A SANDY LOAM ELEV. = 281.25
9" – 60" B SANDY LOAM 10YR 4/4 ELEV. = 277.0
60" – 240" C SAND AND GRAVEL 2.5Y 6/3 ELEV = 262.0
PERMEABILITY RATE – 27.2 IN/HR

PERMEABILITY TEST 5-1 – ELEVATION = 275.0
0 – 36" A SANDY LOAM ELEV. = 272.0
36" – 60" B SANDY LOAM 10YR 4/4 ELEV. = 270.0
60" – 168" C SAND AND GRAVEL 2.5Y 6/3 ELEV = 261.0
PERMEABILITY RATE – 35.7 IN/HR

PERMEABILITY TEST 5-2 – ELEVATION = 278.1
0 – 12" A SANDY LOAM ELEV. = 277.1
12" – 40" B SANDY LOAM 10YR 4/4 ELEV. = 274.77
40" – 198" C SAND AND GRAVEL 2.5Y 6/3 ELEV = 261.6
WATER @ 198" ELEV. = 261.6
PERMEABILITY RATE – 29.8 IN/HR

WETLAND BUFFER ZONE DISTURBANCE

0 – 50' BUFFER ZONE – 0 SQ. FT.
50' – 100' BUFFER ZONE – 9,308 SQ. FT.

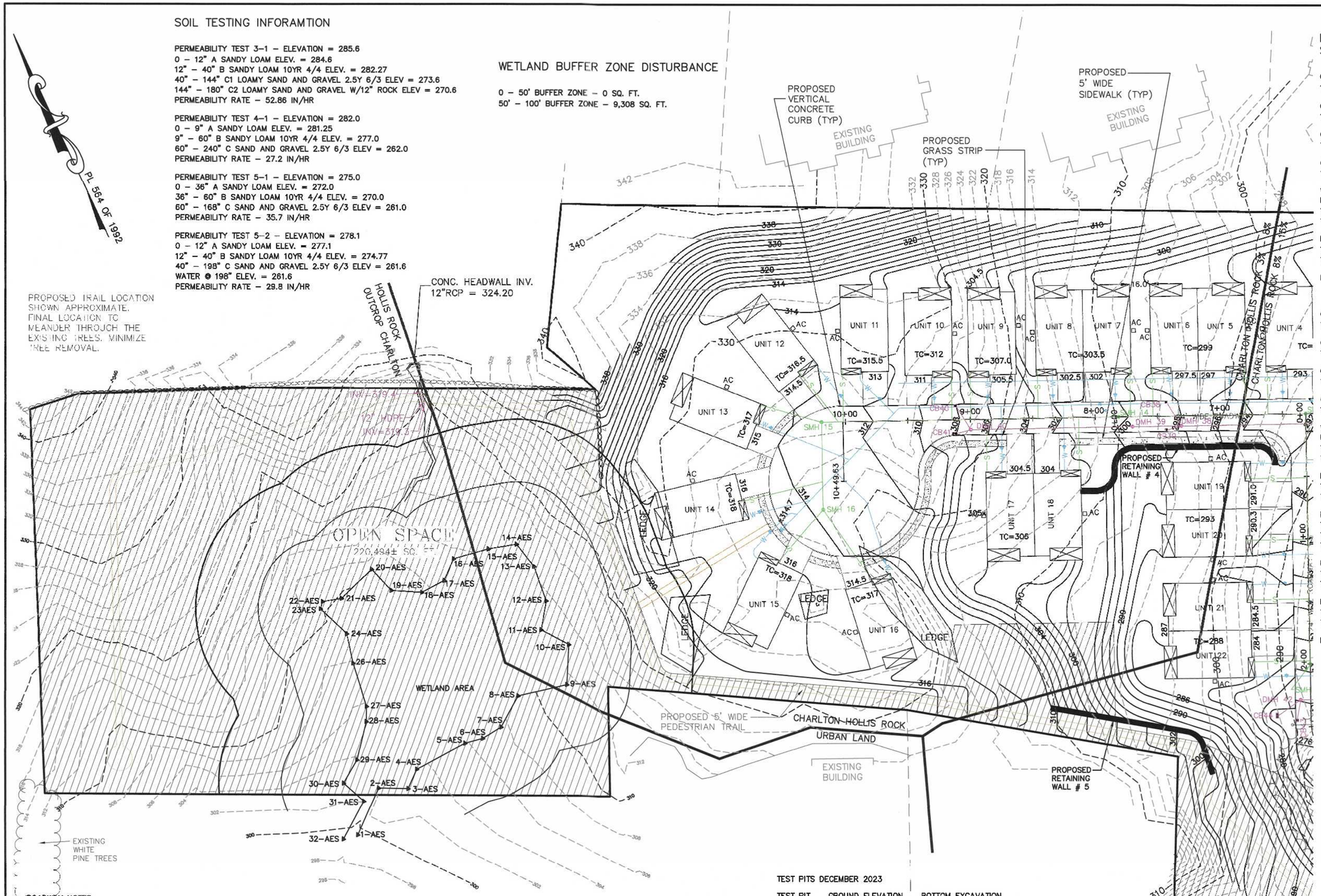

DRAINAGE STRUCTURE SCHEDULE

CB 30 – RIM = 253.86
12" DI INV OUT = 251.54

CB 31 – RIM = 253.86
12" RCP INV OUT = 251.26

CB 32 – RIM = 255.9
12" RCP INV OUT = 251.51

CB 33 – RIM = 255.4
12" RCP INV = 251.56

WQU – CASCADE MODEL CS-4
DMH 30 – RIM = 254.8
12" RCP INV IN = 251.20
12" RCP INV OUT = 251.10

DMH 31 – RIM = 255.5
12" RCP INV IN = 251.35
12" RCP INV OUT = 251.25

HW 30 INV = 250.98

CB 34 – RIM = 268.61
12" RCP INV OUT = 261.58

CB 35 – RIM = 268.61
12" RCP INV OUT = 261.34

CB 46 – RIM = 259.0
12" RCP INV OUT = 252.98

CB 51 – RIM = 273.0 DOUBLE GRATE
12" HDPE INV OUT = 269.8

WQU – CASCADE MODEL CS-4
DMH 32 – RIM = 258.5
12" RCP INV IN = 252.75
12" RCP INV OUT = 252.65

DMH 33 – RIM = 258.7
12" RCP INV IN = 254.26
12" RCP INV OUT = 254.16

DMH 34 – RIM = 268.33
12" RCP INV IN = 261.26 CB 34& CB35
12" RCP INV IN = 263.26 DMH 41
12" RCP INV OUT = 260.26

DMH 35 – RIM = 258.9
12" RCP INV IN = 254.35
12" RCP INV OUT = 254.25

DMH 41 – RIM – 272.0
12" HDPE INV IN = 268.5
12" RCP INV OUT = 264.62

INV 32 INV = 252.44

DRAINAGE STRUCTURE SCHEDULE TO POND 3

CB 36 – RIM = 290.73
12" RCP INV = 286.73

CB 37 – RIM = 290.73
12" RCP INV = 286.73

CB 38 – RIM = 298.39
12" RCP INV OUT = 294.39

CB 39 – RIM = 298.39
12" RCP INV OUT = 294.08

CB 40 – RIM = 307.91
12" RCP INV OUT = 303.91

CB 41 – RIM = 307.91 DOUBLE GRATE
12" RCP INV OUT = 303.46

WQU – CASCADE MODEL CS-4
DMH 36 – RIM = 284.50
15" RCP IN = 280.25
18" HDPE INV OUT = 280.00

DMH 37 – RIM = 290.33
12" RCP INV IN = 286.33 CB 36 & CB 37
15" RCP IN = 282.87 DMH 38
15" RCP INV OUT = 282.77

DMH 38 – RIM = 297.76
12" RCP INV IN = 293.76 CB 38 & CB 39
12" RCP INV IN = 291.00 DMH 39
15" RCP INV OUT = 288.71

DMH 39 – RIM = 299.66
12" RCP INV IN = 294.40 DMH 40
12" RCP INV OUT = 292.40

DMH 40 – RIM = 307.12
12" RCP INV IN = 303.12
12" RCP INV OUT = 299.44

DRAINAGE STRUCTURE SCHEDULE EXISTING POND

CB42 – RIM = 276.91
12" RCP INV = 272.00

CB 43 – RIM = 276.91
12" RCP INV = 271.23

CB 44 – RIM = 276.0 DOUBLE GRATE
12" RCP INV OUT = 272.00

DMH 42 – RIM = 278.0
12" RCP INV IN = 271.64 CB 43 & CB 44
12" RCP INV OUT = 271.39

WQU – CASCADE MODEL CS-4
DMH 43 – RIM = 278.5
15" RCP INV IN = 270.95
15" RCP INV OUT = 270.85

DMH 44 – RIM = 274.0
15" RCP INV IN = 268.70
15" RCP INV OUT = 266.70

DMH 45 – RIM = 277.0
12" RCP INV IN = 271.50 DMH 46
15 RCP INV IN = 264.93 DMH 44
15" RCP INV OUT = 264.93

DMH 46 – RIM = 281.0
12" HDPE INV IN = 278.25
12" RCP INV OUT = 272.25

ROADWAY NOTES:
1. ALL CURBING TO BE REINFORCED VERTICAL CONCRETE.
2. SIDEWALKS TO BE 5' WIDE AND CAST IN PLACE CONCRETE.

WATER NOTES:
1. WATER CONNECTIONS TO THE PROPOSED BUILDING ARE SHOWN AS 2" FOR DOMESTIC AND 4" FOR FIRE PROTECTION. FINAL WATER PIPE SIZING WILL BE COMPLETED BY THE PLUMBING AND OR FIRE PROTECTION ENGINEERS.
2. (SECTION 300-12) WHEN BUILDING FINISH FLOOR ARE BETWEEN ELEVATION 310 AND 340 BOOSTER PUMPS ARE RECOMMENDED.

MONUMENTATION LEGEND

IP (FND) – IRON PIN OR PIPE FOUND
DH (FND) – DRILL HOLE FOUND
IP (TBS) – IRON PIN TO BE SET

TEST PITS DECEMBER 2023

TEST PIT	GROUND ELEVATION	BOTTOM EXCAVATION
1-25	287.0±	276.0 (WATER AT 276.0)±
3-0	306.06	297.9 (WATER AT 300.06)
4-0	310.81	300.31 (WATER AT 306.81)
5-0	325.10	322.10 FRACTURED ROCK
6-0	326.60	322.60 REFUSAL
7-50	329.24	319.91 (WATER AT 321.74)
3-0N	275.92	263.92 S & G
4-0N	288.41	277.16 ROCK
5-0N	290.36	278.36 S & G
8-0N	316.50	312.50 REFUSAL
9-0N	329.29	325.29 REFUSAL
10-0N	328.43	322.43 REFUSAL

GRADING AND UTILITY PLAN – 1
SENIOR VILLAGE
PANTHER WAY
FRANKLIN, MASSACHUSETTS
PREPARED FOR
CAMFORD PROPERTY GROUP, INC.
37 EAST CENTRAL STREET
FRANKLIN, MASSACHUSETTS
DECEMBER 13, 2024
SCALE: 1" = 40'

SITE PLAN APPROVAL
REQUIRED
FRANKLIN PLANNING BOARD

DATE

GRAPHIC SCALE
40 0 20 40 80 160
(IN FEET)
1 inch = 40 ft.

NO.	DATE	DESCRIPTION	BY
1	6/20/25	REVIEW COMMENTS	RRG

COMMONWEALTH OF MASSACHUSETTS
CARLOS A. QUINTAL
CIVIL
No. 30812
REGISTERED PROFESSIONAL ENGINEER
CARLOS A. QUINTAL P.E. #30812

DATE		INT.
	FIELD BY:	
BK#	FIELD BOOK	PG#
12/24	CALCS BY:	RRG
12/24	DESIGNED BY:	RRG
12/24	DRAWN BY:	COMP
12/24	CHECKED BY:	CAQ

UNITED CONSULTANTS INC.
850 FRANKLIN STREET SUITE 11D
WRENTHAM, MASSACHUSETTS 02093
508-384-6560 FAX 508-384-6566

DATE DEC. 13, 2024
SCALE 1" = 40'
PROJECT UC1378
SHEET 6 OF 17

PANTHER WAY POSTED SPEED LIMIT – 25 MPH
STOPPING SIGHT DISTANCE
– 155 FEET AT 0% GRADE
– 158 FEET AT 3% DOWNGRADE
REFERNCE MADDHIGHWAY EXHIBIT 3-8 2008 EDITION

PROPOSED SIDEWALK WITH HANDICAP RAMPS AND RESETING OF EXISTING CURBING.

WORK TO BE COMPLETED WITH WRITTEN PERMISSION FROM THE HIGHWOOD CONDOMINIUM OWNERS. THIS INCLUDE SIDEWALK AND GRADING EASEMENTS.

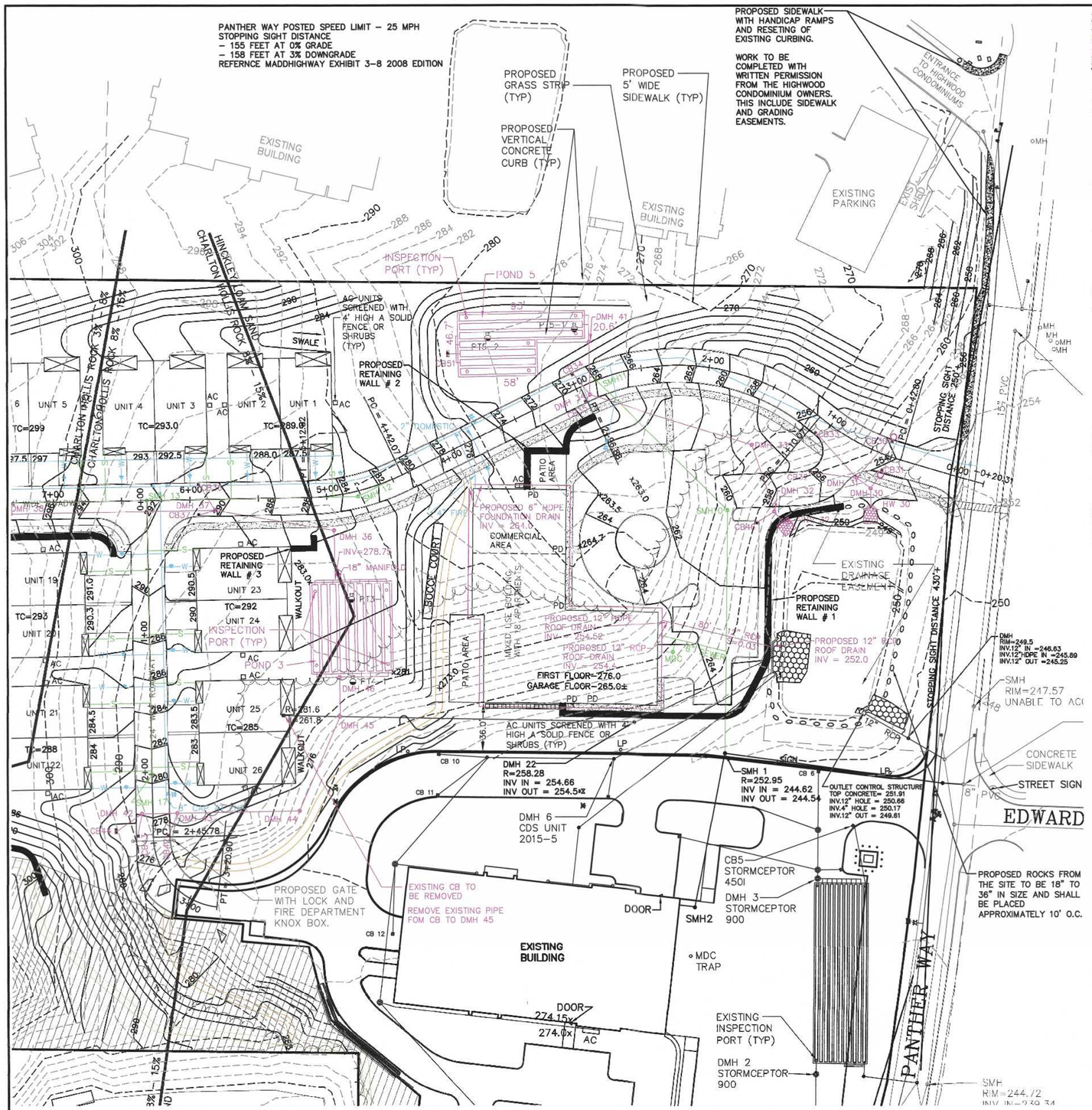

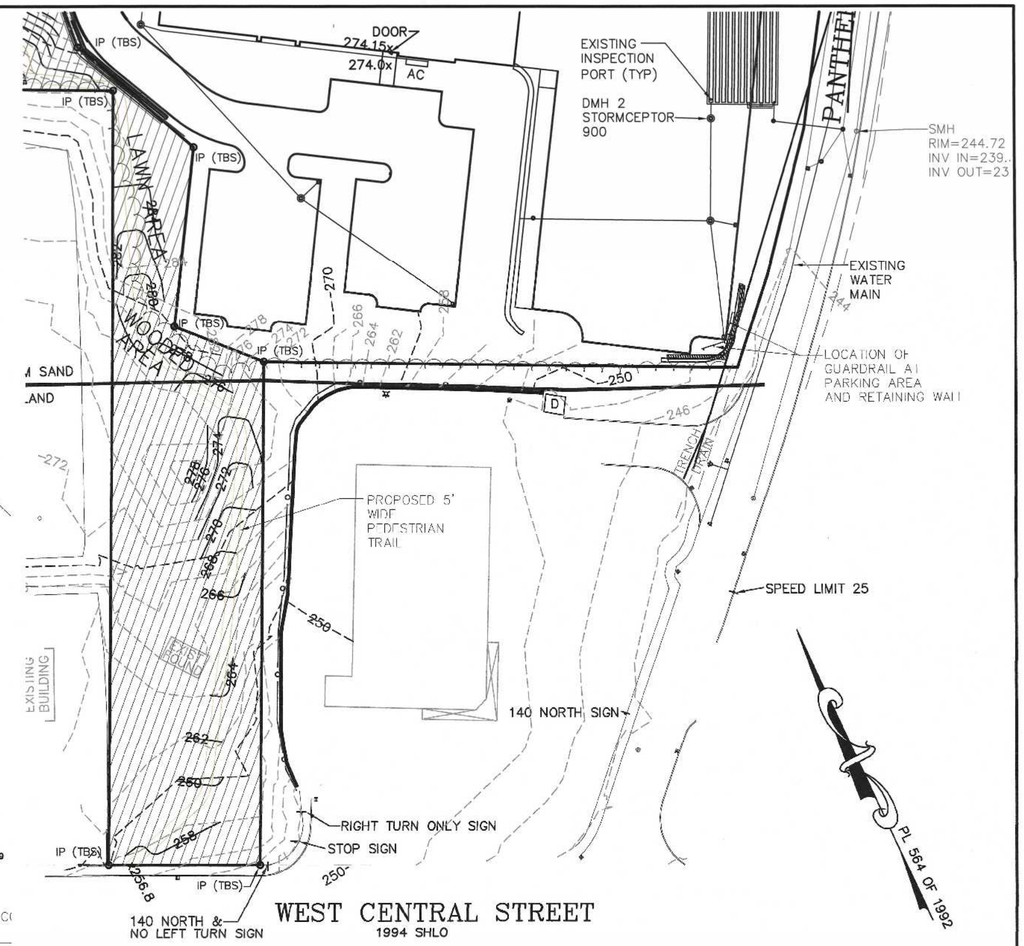

SEWER STRUCTURE SCHEDULE

EXISTING SMH 1 – RIM = 252.85
PROPOSED 8" PVC INV IN = 244.62

SMH 10 – RIM = 258.7
8" PVC INV IN = 251.68
8" PVC INV OUT = 251.58

SMH 11 – RIM = 267.6
8" PVC INV IN = 257.68
8" PVC INV OUT = 257.58

SMH 12 – RIM = 283.2
8" PVC INV IN = 272.41
8" PVC INV OUT = 272.31

SMH 13 – RIM = 292.3
8" PVC INV IN = 281.42 SMH 14
8" PVC INV IN = 275.53 SMH 16
8" PVC INV OUT = 275.43

SMH 14 – RIM = 300.2
8" PVC INV IN = 291.54
8" PVC INV OUT = 288.72

SMH 15 – RIM = 313.2
8" PVC INV IN = 303.34
8" PVC INV OUT = 303.24

SMH 16 – RIM = 313.75
8" PVC INV OUT = 305.32

SMH 17 – RIM = 280.53
8" PVC INV IN = 276.53

MDC TRAP – RIM = 264.2
4" CI INV IN = 250.38
4" CI INV OUT = 250.05
MDC TRAP FINAL PIPE SIZING TO BE DETERMINED BY THE PLUMBING ENGINEER.

WATER NOTES:
1. WATER CONNECTIONS TO THE PROPOSED BUILDING ARE SHOWN AS 2" FOR DOMESTIC AND 4" FOR FIRE PROTECTION. FINAL WATER PIPE SIZING WILL BE COMPLETED BY THE PLUMBING AND OR FIRE PROTECTION ENGINEERS.
2. (SECTION 300-12) WHEN BUILDING FINISH FLOOR ARE BETWEEN ELEVATION 310 AND 340 BOOSTER PUMPS ARE RECOMMENDED.

GRADING AND UTILITY PLAN – 2
SENIOR VILLAGE
PANTHER WAY
FRANKLIN, MASSACHUSETTS
PREPARED FOR
CAMFORD PROPERTY GROUP, INC.
37 EAST CENTRAL STREET
FRANKLIN, MASSACHUSETTS
DECEMBER 13, 2024
SCALE: 1" = 40'

SITE PLAN APPROVAL
REQUIRED
FRANKLIN PLANNING BOARD

DATE

GRAPHIC SCALE
40 0 20 40 80 160
(IN FEET)
1 inch = 40 ft.

NO.	DATE	DESCRIPTION	BY
1	6/20/25	REVIEW COMMENTS	RRG

COMMONWEALTH OF MASSACHUSETTS
CARLOS A. QUINTAL
CIVIL
No. 30812
REGISTERED PROFESSIONAL ENGINEER
CARLOS A. QUINTAL P.E. #30812

DATE		INT.
	FIELD BY:	
BK#	FIELD BOOK	PG#
12/24	CALCS BY:	RRG
12/24	DESIGNED BY:	RRG
12/24	DRAWN BY:	COMP
12/24	CHECKED BY:	CAQ

UNITED CONSULTANTS INC.
850 FRANKLIN STREET SUITE 11D
WRENTHAM, MASSACHUSETTS 02093
508-384-6560 FAX 508-384-6566

DATE DEC. 13, 2024
SCALE 1" = 40'
PROJECT UC1378
SHEET 7 OF 17

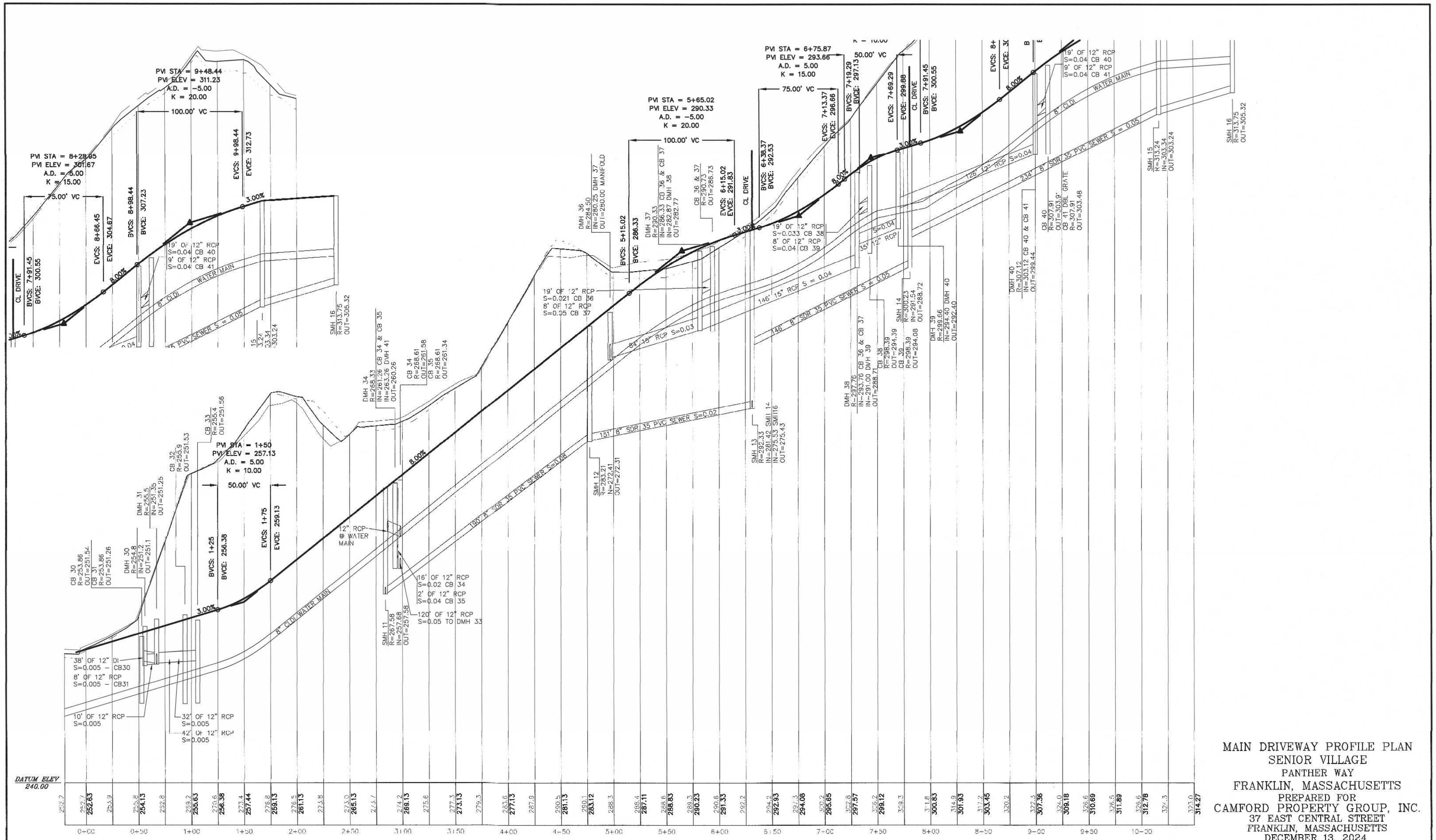

MAIN DRIVEWAY PROFILE PLAN
SENIOR VILLAGE
PANTHER WAY
FRANKLIN, MASSACHUSETTS
PREPARED FOR
CAMFORD PROPERTY GROUP, INC.
37 EAST CENTRAL STREET
FRANKLIN, MASSACHUSETTS
DECEMBER 13, 2024
SCALE: 1" = 40'

SITE PLAN APPROVAL
REQUIRED
FRANKLIN PLANNING BOARD

DATE

GRAPHIC SCALE
40 0 20 40 80 160
(IN FEET)
1 inch = 40 ft.

NO.	DATE	DESCRIPTION	BY
1	6/20/25	REVIEW COMMENTS	RRG

CARLOS A. QUINTAL P.E. #30812

DATE		INT.
	FIELD BY:	
BK#	FIELD BOOK	PG#
12/24	CALCS BY:	RRG
12/24	DESIGNED BY:	RRG
12/24	DRAWN BY:	COMP
12/24	CHECKED BY:	CAQ

UNITED CONSULTANTS INC.
650 FRANKLIN STREET SUITE 11D
WRENTHAM, MASSACHUSETTS 02093
508-384-6560 FAX 508-384-6568

DATE DEC. 13, 2024
SCALE 1" = 40'
PROJECT UC1378
SHEET 8 OF 17

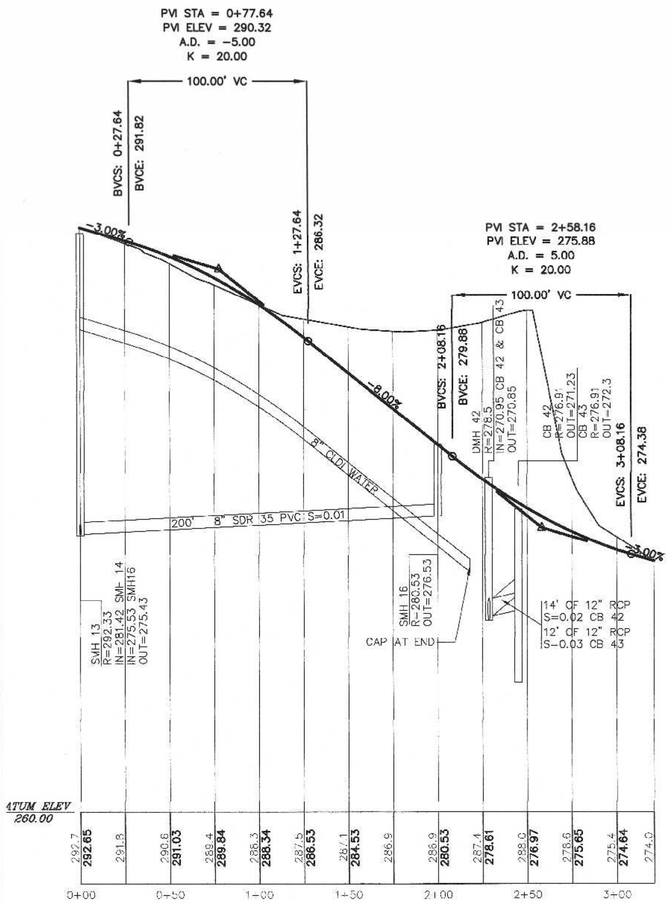

LOWER DRIVEWAY
SCALE: H - 1" - 40'
V: 1" - 4'

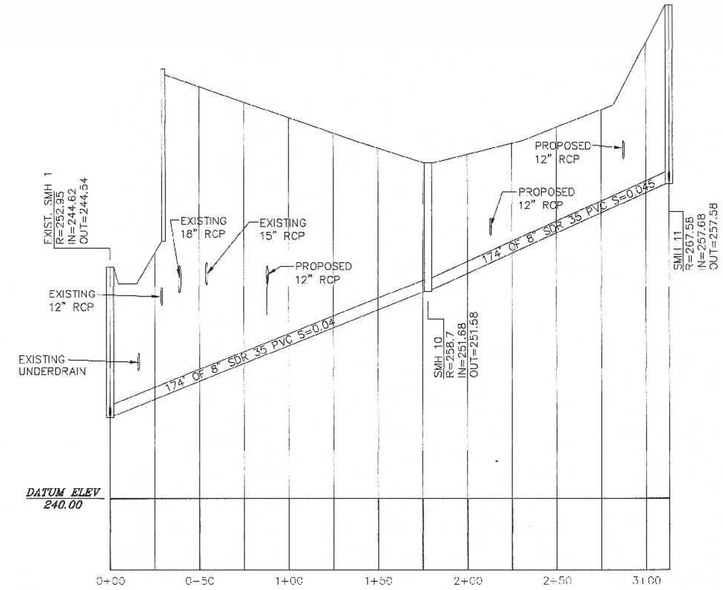

LOWER PARKING LOT
SCALE: H - 1" - 40'
V: 1" - 4'

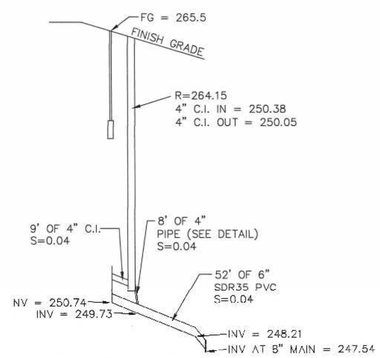

MIXED USE BUILDING
SEWER CONNECTIONS
SCALE: H - 1" - 40'
V: 1" - 4'

UPPER AND LOWER DRIVEWAY
AND SEWER PROFILE PLAN
SENIOR VILLAGE
PANTHER WAY
FRANKLIN, MASSACHUSETTS
PREPARED FOR
CAMFORD PROPERTY GROUP, INC.
37 EAST CENTRAL STREET
FRANKLIN, MASSACHUSETTS
DECEMBER 13, 2024
SCALE: 1" = 40'

SITE PLAN APPROVAL
REQUIRED
FRANKLIN PLANNING BOARD

DATE

GRAPHIC SCALE
40 0 20 40 80 160
(IN FEET)
1 inch = 40 ft.

NO.	DATE	DESCRIPTION	BY
1	6/20/25	REVIEW COMMENTS	RRG

COMMONWEALTH OF MASSACHUSETTS
CARLOS A. QUINTAL
CIVIL
No. 30812
REGISTERED PROFESSIONAL ENGINEER

CARLOS A. QUINTAL P.E. #30812

DATE		INT.
	FIELD BY:	
BK#	FIELD BOOK	PG#
12/24	CALCS BY:	RRG
12/24	DESIGNED BY:	RRG
12/24	DRAWN BY:	COMP
12/24	CHECKED BY:	CAQ

UNITED CONSULTANTS INC.
850 FRANKLIN STREET SUITE 11D
WRENTHAM, MASSACHUSETTS 02093
508-384-6560 FAX 508-384-6566

DATE DEC. 13, 2024
SCALE 1" = 40'
PROJECT UC1378
SHEET 9 OF 17

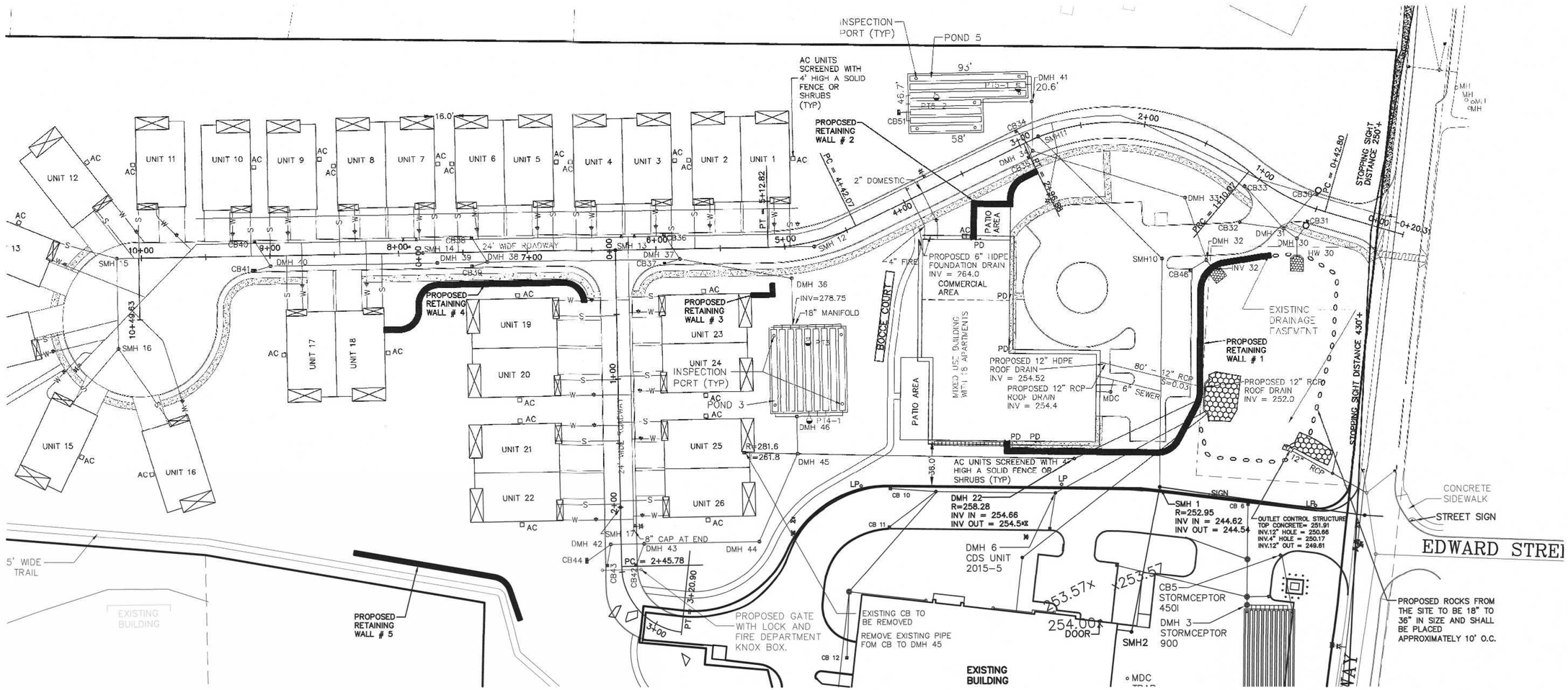

DRIVEWAY PLANS
SENIOR VILLAGE
PANTHER WAY
FRANKLIN, MASSACHUSETTS
PREPARED FOR
CAMFORD PROPERTY GROUP, INC.
37 EAST CENTRAL STREET
FRANKLIN, MASSACHUSETTS
DECEMBER 13, 2024
SCALE: 1" = 40'

SITE PLAN APPROVAL
REQUIRED
FRANKLIN PLANNING BOARD

DATE

GRAPHIC SCALE
40 0 20 40 80 160
(IN FEET)
1 inch = 40 ft.

NO.	DATE	DESCRIPTION	BY
1	6/20/25	REVIEW COMMENTS	RRG

COMMONWEALTH OF MASSACHUSETTS
CARLOS A. QUINTAL
CIVIL
No. 30812
REGISTERED PROFESSIONAL ENGINEER

CARLOS A. QUINTAL P.E. #30812

DATE		INT.
	FIELD BY:	
BK#	FIELD BOOK	PG#
12/24	CALCS BY:	RRG
12/24	DESIGNED BY:	RRG
12/24	DRAWN BY:	COMP
12/24	CHECKED BY:	CAQ

UNITED CONSULTANTS INC.
850 FRANKLIN STREET SUITE 11D
WRENTHAM, MASSACHUSETTS 02093
508-384-6560 FAX 508-384-6566

DATE: DEC. 13, 2024
SCALE: 1" = 40'
PROJECT: UC1378
SHEET: 10 OF 17

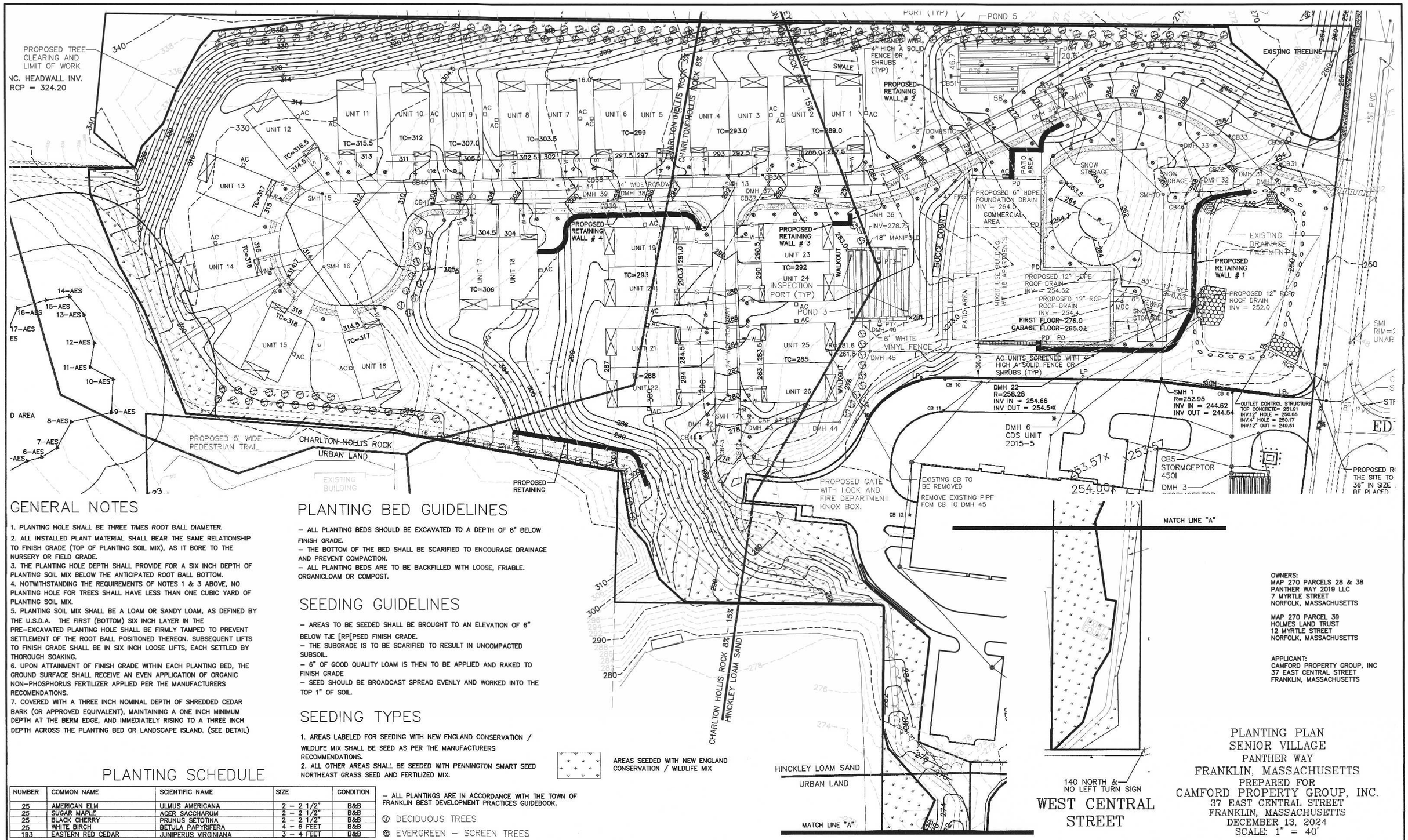

GENERAL NOTES

1. PLANTING HOLE SHALL BE THREE TIMES ROOT BALL DIAMETER.
2. ALL INSTALLED PLANT MATERIAL SHALL BEAR THE SAME RELATIONSHIP TO FINISH GRADE (TOP OF PLANTING SOIL MIX), AS IT BORE TO THE NURSERY OR FIELD GRADE.
3. THE PLANTING HOLE DEPTH SHALL PROVIDE FOR A SIX INCH DEPTH OF PLANTING SOIL MIX BELOW THE ANTICIPATED ROOT BALL BOTTOM.
4. NOTWITHSTANDING THE REQUIREMENTS OF NOTES 1 & 3 ABOVE, NO PLANTING HOLE FOR TREES SHALL HAVE LESS THAN ONE CUBIC YARD OF PLANTING SOIL MIX.
5. PLANTING SOIL MIX SHALL BE A LOAM OR SANDY LOAM, AS DEFINED BY THE U.S.D.A. THE FIRST (BOTTOM) SIX INCH LAYER IN THE PRE-EXCAVATED PLANTING HOLE SHALL BE FIRMLY TAMPED TO PREVENT SETTLEMENT OF THE ROOT BALL POSITIONED THEREON. SUBSEQUENT LIFTS TO FINISH GRADE SHALL BE IN SIX INCH LOOSE LIFTS, EACH SETTLED BY THOROUGH SOAKING.
6. UPON ATTAINMENT OF FINISH GRADE WITHIN EACH PLANTING BED, THE GROUND SURFACE SHALL RECEIVE AN EVEN APPLICATION OF ORGANIC NON-PHOSPHORUS FERTILIZER APPLIED PER THE MANUFACTURERS RECOMENDATIONS.
7. COVERED WITH A THREE INCH NOMINAL DEPTH OF SHREDDED CEDAR BARK (OR APPROVED EQUIVALENT), MAINTAINING A ONE INCH MINIMUM DEPTH AT THE BERM EDGE, AND IMMEDIATELY RISING TO A THREE INCH DEPTH ACROSS THE PLANTING BED OR LANDSCAPE ISLAND. (SEE DETAIL)

PLANTING BED GUIDELINES

- ALL PLANTING BEDS SHOULD BE EXCAVATED TO A DEPTH OF 8" BELOW FINISH GRADE.
- THE BOTTOM OF THE BED SHALL BE SCARIFIED TO ENCOURAGE DRAINAGE AND PREVENT COMPACTION.
- ALL PLANTING BEDS ARE TO BE BACKFILLED WITH LOOSE, FRIABLE. ORGANICLOAM OR COMPOST.

SEEDING GUIDELINES

- AREAS TO BE SEEDED SHALL BE BROUGHT TO AN ELEVATION OF 6" BELOW TJE [RP[PSED FINISH GRADE.
- THE SUBGRADE IS TO BE SCARIFIED TO RESULT IN UNCOMPACTED SUBSOIL.
- 6" OF GOOD QUALITY LOAM IS THEN TO BE APPLIED AND RAKED TO FINISH GRADE
- SEED SHOULD BE BROADCAST SPREAD EVENLY AND WORKED INTO THE TOP 1" OF SOIL.

SEEDING TYPES

1. AREAS LABELED FOR SEEDING WITH NEW ENGLAND CONSERVATION / WILDLIFE MIX SHALL BE SEED AS PER THE MANUFACTURERS RECOMMENDATIONS.
2. ALL OTHER AREAS SHALL BE SEEDED WITH PENNINGTON SMART SEED NORTHEAST GRASS SEED AND FERTILIZED MIX.

AREAS SEEDED WITH NEW ENGLAND CONSERVATION / WILDLIFE MIX

PLANTING SCHEDULE

NUMBER	COMMON NAME	SCIENTIFIC NAME	SIZE	CONDITION
25	AMERICAN ELM	ULMUS AMERICANA	2 – 2 1/2"	B&B
25	SUGAR MAPLE	ACER SACCHARUM	2 – 2 1/2"	B&B
25	BLACK CHERRY	PRUNUS SETOTINA	2 – 2 1/2"	B&B
25	WHITE BIRCH	BETULA PAPYRIFERA	4 – 6 FEET	B&B
193	EASTERN RED CEDAR	JUNIPERUS VIRGINIANA	3 – 4 FEET	B&B

- ALL PLANTINGS ARE IN ACCORDANCE WITH THE TOWN OF FRANKLIN BEST DEVELOPMENT PRACTICES GUIDEBOOK.

DECIDUOUS TREES

EVERGREEN – SCREEN TREES

OWNERS:
MAP 270 PARCELS 28 & 38
PANTHER WAY 2019 LLC
7 MYRTLE STREET
NORFOLK, MASSACHUSETTS

MAP 270 PARCEL 39
HOLMES LAND TRUST
12 MYRTLE STREET
NORFOLK, MASSACHUSETTS

APPLICANT:
CAMFORD PROPERTY GROUP, INC
37 EAST CENTRAL STREET
FRANKLIN, MASSACHUSETTS

PLANTING PLAN
SENIOR VILLAGE
PANTHER WAY
FRANKLIN, MASSACHUSETTS
PREPARED FOR
CAMFORD PROPERTY GROUP, INC.
37 EAST CENTRAL STREET
FRANKLIN, MASSACHUSETTS
DECEMBER 13, 2024
SCALE: 1" = 40'

SITE PLAN APPROVAL
REQUIRED
FRANKLIN PLANNING BOARD

DATE

PER SECTION 185-48.F.3(c.ii) TWO TREES ARE REQUIRED FOR EVERY 3 PARKING SPACES.
24 PARKING SPACE = 16 TREES

GRAPHIC SCALE
40 0 20 40 80 160
(IN FEET)
1 inch = 40 ft.

NO.	DATE	DESCRIPTION	BY
1	6/20/25	REVIEW COMMENTS	RRG

COMMONWEALTH OF MASSACHUSETTS — CARLOS A. QUINTAL — CIVIL — No. 30812 — REGISTERED PROFESSIONAL ENGINEER

CARLOS A. QUINTAL P.E. #30812

DATE		INT.
	FIELD BY:	
BK#	FIELD BOOK	PG#
12/24	CALCS BY:	RRG
12/24	DESIGNED BY:	RRG
12/24	DRAWN BY:	COMP
12/24	CHECKED BY:	CAQ

UNITED CONSULTANTS INC.
850 FRANKLIN STREET SUITE 11D
WRENTHAM, MASSACHUSETTS 02093
508-384-6560 FAX 508-384-6566

DATE: DEC. 13, 2024
SCALE: 1" = 40'
PROJECT: UC1378
SHEET: 11 OF 17

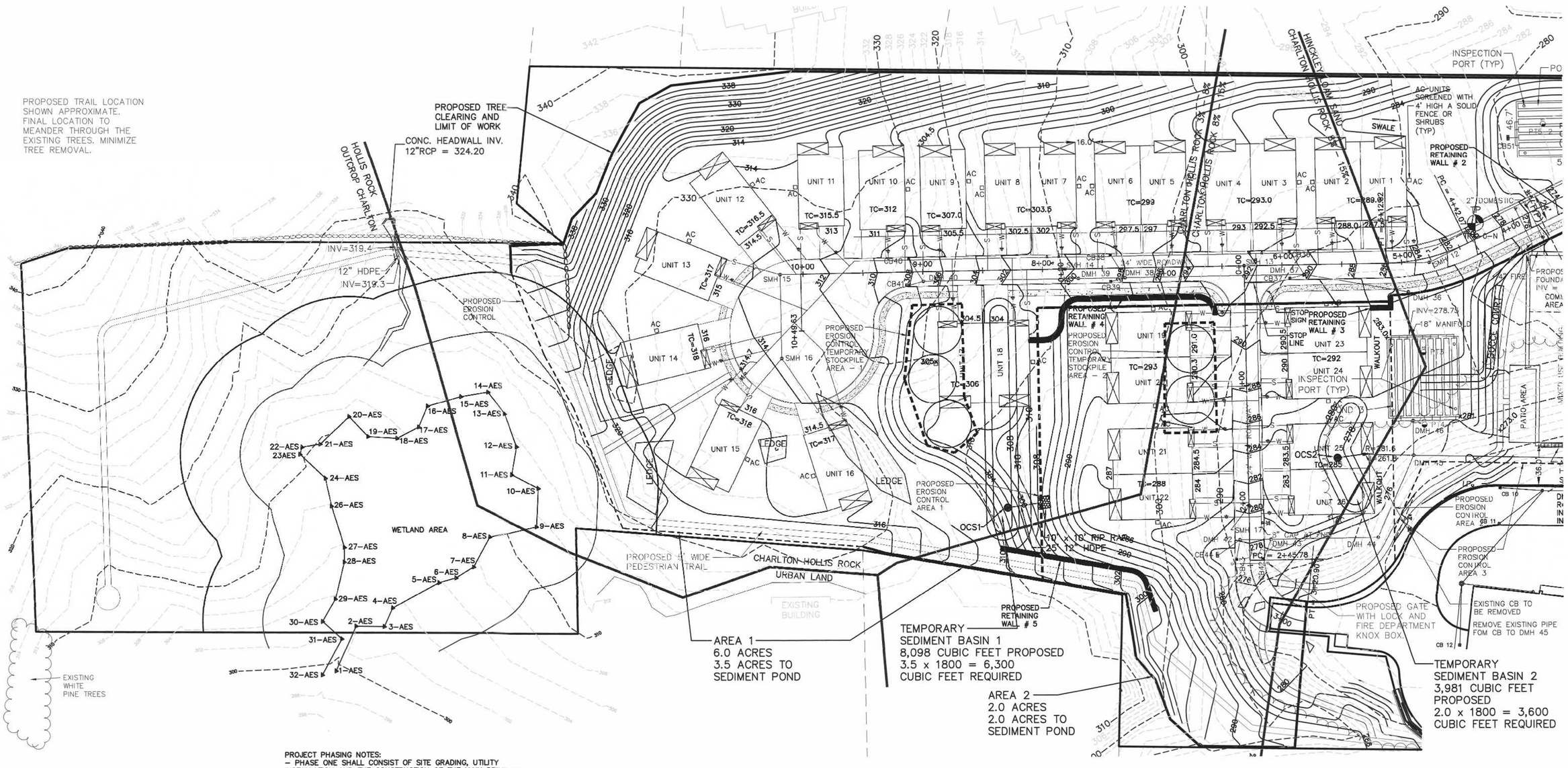

PROJECT PHASING NOTES:
– PHASE ONE SHALL CONSIST OF SITE GRADING, UTILITY INSTALLATION AND THE CONSTRUCTION OF THE MAIN DRIVEWAY. CONSTRUCT AND INSTALL UNITS 1 – 16. ALL AREA AROUND EACH UNIT SHALL BE LOAMED AND SEEDED ONCE THE UNIT IS WEATHER TIGHT. REMOVE THE TEMPORARY STOCKPILES AND SEDIMENTATION POND 1. CONSTRUCT UNITS 17 AND 18.

PHASE TWO SHALL CONSIST OF THE GRADING, UTILITY INSTALLATION AND THE CONSTRUCTION OF THE CONNECTION DRIVEWAY. CONSTRUCT AND INSTALL UNITS 19 – 24. ALL AREA AROUND EACH UNIT SHALL BE LOAMED AND SEEDED ONCE THE UNIT IS WEATHER TIGHT. REMOVE THE TEMPORARY STOCKPILES AND SEDIMENTATION POND 2. CONSTRUCT UNITS 25 AND 26.

PHASE THREE SHALL CONSIST OF THE CONSTRUCTION OF THE MIXED USE BUILDING. UTILITY INSTALLATION AND SITE GRADING SHALL BE COMPLETED WHILE SEDIMENTATION POND 3 IS MAINTAINED. WHEN NECESSARY REMOVE TEMPORARY SEDIMENTATION POND 3 AND COMPLETE THE PARKING AREA CONSTRUCTION.

(REFER TO PERMANENT AND TEMPORARY STABILIZATION AND EROSION CONTROL NOTES ON SHEET 12 AND 13.

NOTE:
PROPOSED EROSION CONTROL SHALL CONSIST OF A 12" DIAMETER COMPOST SOCK.

CONSTRUCTION PHASE SNOW STORAGE:
1. THE MAIN DRIVEWAY AND CONNECTOR DRIVEWAY SHALL HAVE SNOW STORAGE STORED IN WINDROWS ALONG THE EDGE OF THE ROADWAY (EITHER GRAVEL OR PAVEMENT) DEPENDING ON TIMING.
2. SNOW STORAGE FOR THE CONSTRUCTION PHASE OF THE MIXED USE COMMERCIAL BUILDING SHALL BE AS SHOWN ON SHEET 13.

OWNERS:
MAP 270 PARCELS 28 & 38
PANTHER WAY 2019 LLC
7 MYRTLE STREET
NORFOLK, MASSACHUSETTS

MAP 270 PARCEL 39
HOLMES LAND TRUST
12 MYRTLE STREET
NORFOLK, MASSACHUSETTS

APPLICANT:
CAMFORD PROPERTY GROUP, INC
37 EAST CENTRAL STREET
FRANKLIN, MASSACHUSETTS

EROSION CONTROL PLAN – 1
SENIOR VILLAGE
PANTHER WAY
FRANKLIN, MASSACHUSETTS
PREPARED FOR
CAMFORD PROPERTY GROUP, INC.
37 EAST CENTRAL STREET
FRANKLIN, MASSACHUSETTS
DECEMBER 13, 2024
SCALE: 1" = 40'

SITE PLAN APPROVAL
REQUIRED
FRANKLIN PLANNING BOARD

DATE

GRAPHIC SCALE
40 0 20 40 80 160
(IN FEET)
1 inch = 40 ft.

NO.	DATE	DESCRIPTION	BY
1	6/20/25	REVIEW COMMENTS	RRG

COMMONWEALTH OF MASSACHUSETTS
CARLOS A. QUINTAL
CIVIL
No. 30812
REGISTERED PROFESSIONAL ENGINEER

CARLOS A. QUINTAL P.E. #30812

DATE		INT.
	FIELD BY:	
BK#	FIELD BOOK	PG#
12/24	CALCS BY:	RRG
12/24	DESIGNED BY:	RRG
12/24	DRAWN BY:	COMP
12/24	CHECKED BY:	CAQ

UNITED CONSULTANTS INC.
850 FRANKLIN STREET SUITE 11D
WRENTHAM, MASSACHUSETTS 02093
508-384-6560 FAX 508-384-6566

DATE DEC. 13, 2024
SCALE 1" = 40'
PROJECT UC1378
SHEET 12 OF 17

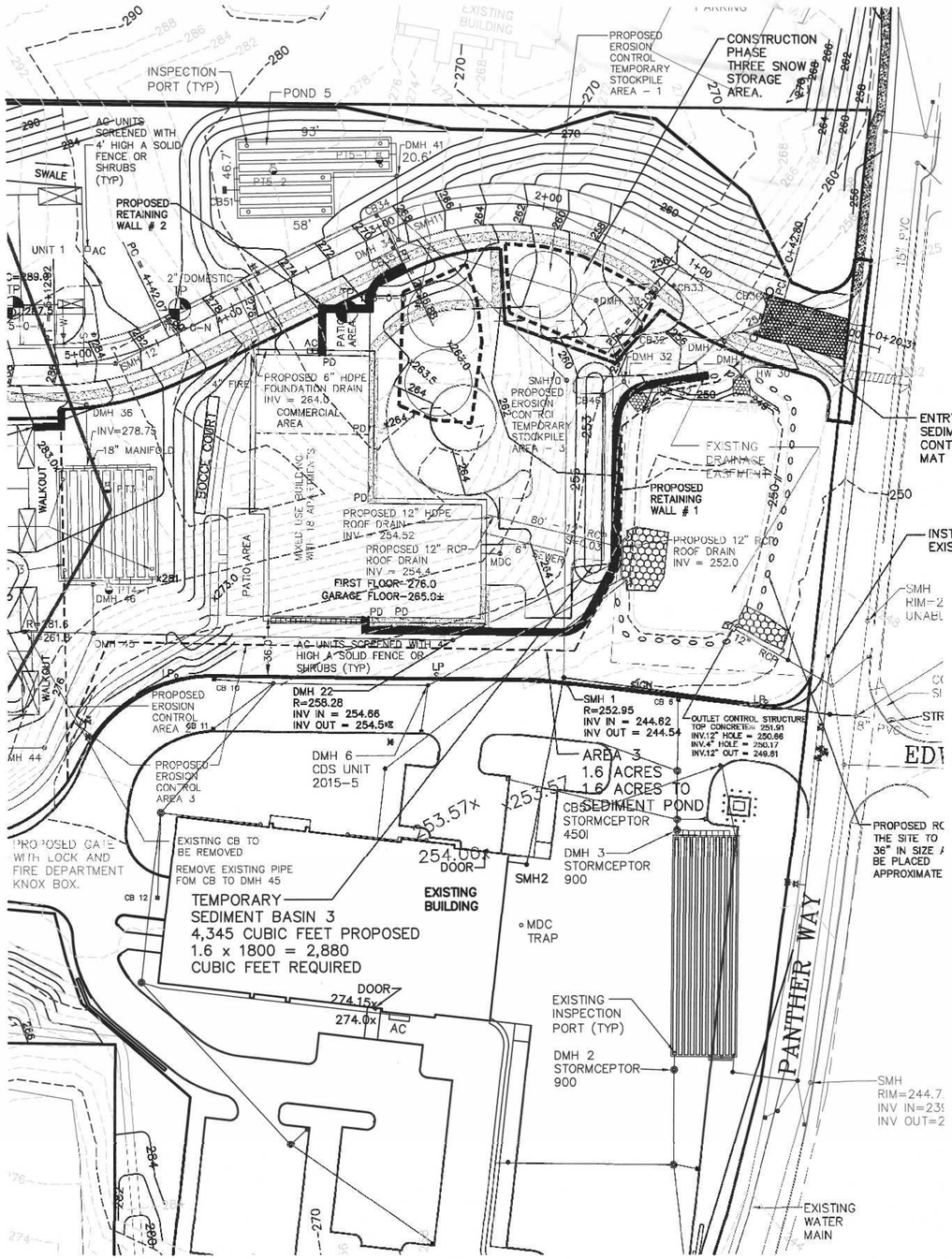

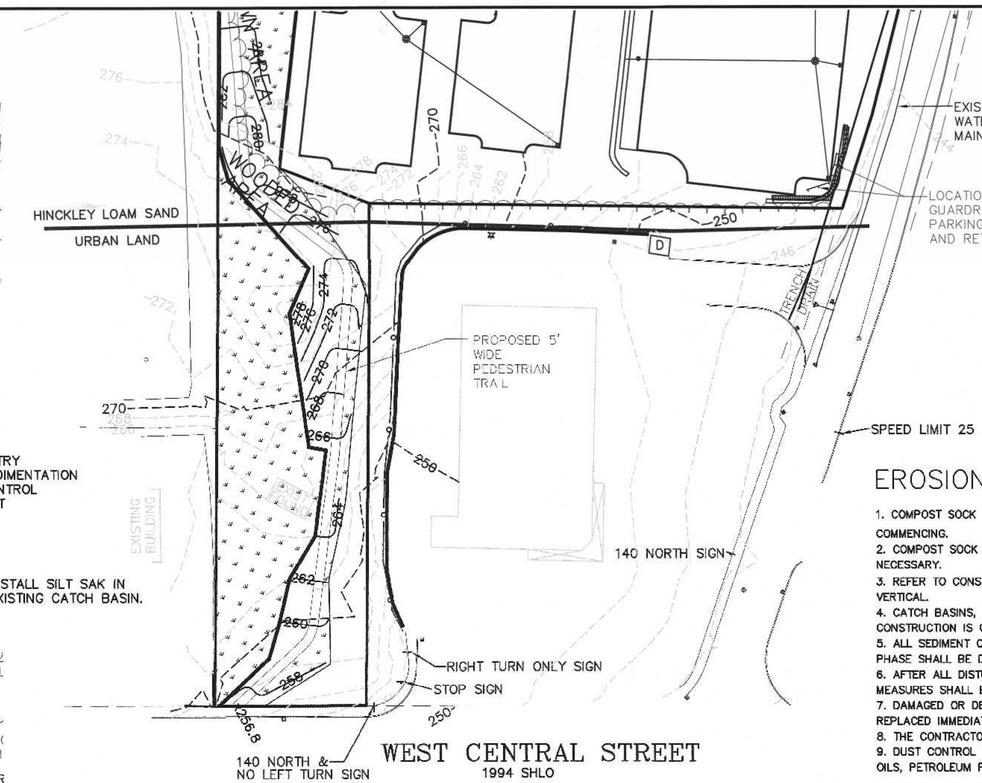

CONSTRUCTION SEQUENCE:

1. INSTALL EROSION CONTROL AND SIGN.
2. COMPLETE THE CLEARING, STUMP REMOVAL AND REMOVE LOAM AND SUBSOIL.
3. PERFORM HAMMERING AND OR BLASTING FOR ROCK REMOVAL.
4. NSTALL SITE UTILITIES, THE STORMWATER SYSTEM SHALL BE INSTALLED WITH EXCESS MATERIAL BEING REMOVED FROM THE SITE AND NECESSARY CONSTRUCTION MATERIALS DELIVERED TO THE SITE. MINIMIZE THE USE OF MATERIAL STOCKPILE AREA.
5. PAVE THE DRIVEWAY AND SSIDEWALKS WITH A BINDER COURSE.
6. EXCAVATE THE HOUSE FOUNDATIONS, FORM AND POUR THE FOUNDATION AND THEN BACKFILL FOUNDATION FOR EACH HOUSE.
7. CONSTRUCT RETAINING WALLS.
8 CURBING SHALL BE INSTALLED.
REPEAT FOR AREAS 2 AND 3.
9. PAVE THE DRIVEWAYS WITH A TOP COURSE.
10. LANDSCAPING SHALL BE PLANTED AND ALL DISTURBED AREAS SHALL BE LOAMED AND SEEDED.

EROSION CONTROL NOTES:

1. COMPOST SOCK SHALL BE INSTALLED PRIOR TO TREE CLEARING OR SITE WORK COMMENCING.
2. COMPOST SOCK TO REMAIN IN CONTACT WITH THE EARTH. REPAIR OR RESET AS NECESSARY.
3. REFER TO CONSTRUCTION SEQUENCE FOR SLOPE GREATER THAN 3' HORIZONTAL TO 1' VERTICAL.
4. CATCH BASINS, UNDERGROUND POND AND PARKING AREA TO BE CLEANED ONCE CONSTRUCTION IS COMPLETED.
5. ALL SEDIMENT COLLECTED DURING THE CONSTRUCTION PHASE OR POST CONSTRUCTION PHASE SHALL BE DISPOSED OF TO AN APPROVED LOCATION.
6. AFTER ALL DISTURBED AREAS HAVE BEEN STABILIZED THE EROSION CONTROL MEASURES SHALL BE REMOVED.
7. DAMAGED OR DETERIORATED EROSION CONTROL MEASURES SHALL BE REPAIRED OR REPLACED IMMEDIATELY AFTER THEY HAVE BEEN IDENTIFIED.
8. THE CONTRACTOR SHALL BE RESPONSIBLE FOR ALL INSPECTIONS.
9. DUST CONTROL WILL BE BY SPRAYING WATER AS NECESSARY. THE USE OF OILS, PETROLEUM PRODUCTS OR TOXIC LIQUIDS FOR DUST CONTROL IS PROHIBITED.

OPERATION AND MAINTENANCE PLAN

CONSTRUCTION PHASE

1. THE OWNERS REPRESENTATIVE, CAMFORD PROPERTY GROUP, INC, 1-508-507-9020 SHALL BE THE RESPONSIBLE PARTY FOR THE STORMWATER MAINTENANCE PLAN.
2. THE SITE CONTRACTOR SHALL INSPECT ALL EROSION CONTROL MEASURES WEEKLY AND AFTER ALL RAIN EVENTS.
3. SEDIMENT SHALL BE REMOVED FROM COMPOST SOCK WHEN A MAXIMUM DEPTH OF 6" IS OBSERVED OR AS NEEDED.
4. CONSTRUCTION ENTRY MAT SHALL BE INSPECTED WEEKLY AND AFTER ALL RAIN EVENTS. SEE DETAIL FOR MAINTENANCE REQUIREMENTS.
5. DAMAGED OR DETERIORATED COMPOST SOCK AND/OR SILT FENCE AREAS SHALL BE REPLACED IMMEDIATELY.
6. EROSION CONTROL MEASURES SHALL REMAIN IN PLACE UNTIL CONSTRUCTION IS COMPLETED AND ALL DISTURBED AREAS ARE STABILIZED.
7. SILT SAKS SHALL BE INSTALLED AT ALL PROPOSED CATCH BASINS AND EXISTING CATCH BASINS 10, 12 AND THE CATCH BASIN IN PANTHER WAY (SEE LABELED CB PANTHER WAY) AND SHALL BE INSPECTED WEEKLY AND AFTER ALL RAIN EVENTS.
8. CLEANING OF SILT SAKS SHALL BE COMPLETED AS NECESSARY.

INSPECTION AND MAINTENANCE SCHEDULE:

1. INSPECTIONS SHALL BE CONDUCTED BY THE APPLICANTS ENGINEER, CONTRACTOR AND / OR REPRESENTATIVES OF THE TOWN AS NECESSARY. AT A MINIMUM INSPECTIONS SHALL BE CONDUCTED ON A MONTHLY BASIS.
2. MONTHLY INSPECTIONS SHALL INCLUDE THE DRIVEWAY(S) AND PARKING LOT SURFACES TO DETERMINE IF ACCUMULATED SEDIMENTS ARE TO BE REMOVED.
3. INSPECTION OF THE PROPOSED CATCH BASINS TO DETERMINE THE DEPTH OF SEDIMENT AND REQUIRED CLEANING.
4. INSPECTION OF PONDS 2, 3, AND 5 TO DETERMINE IF CLEANING IS NECESSARY.
5. THE HEADWALL OUTLET RIPRAP SHALL BE INSPECTED WEEKLY AND ANY SEDIMENT OBSERVED SHALL BE IMMEDIATELY REMOVED.

OPERATION AND MAINTENANCE SCHEDULE

CONSTRUCTION PHASE:

1. THE EROSION CONTROL BARRIERS SHALL BE INSPECTED ON A WEEKLY BASIS AND AFTER ALL STORM EVENTS.
2. THE EXISTING PAVED PARKING AREAS AS WELL THE PROPOSED PARKING AREA ONCE PAVED WILL REQUIRE DAILY INSPECTIONS TO BE CONDUCTED TO DETERMINE THE NECESSITY TO REMOVE ANY ACCUMULATED SEDIMENT. THE REMOVAL OF THE ACCUMULATED SEDIMENT SHALL BE COMPLETED ON THE DAY THE DETERMINATION IS MADE.
3. SILT SAKS SHALL BE INSTALLED AT ALL CATCH BASINS. SILT SAKS, ONCE INSTALLED SHALL BE INSPECTED ON A WEEKLY BASIS AND CLEANED AS NECESSARY.
4. THE WATER QUALITY UNITS SHALL BE INSPECTED ON A WEEKLY BASIS AND CLEANED WHEN THE SEDIMENT DEPTH REACHES 8"
5. THE PONDS SHALL BE INSPECTED AFTER EACH STORM EVENT AND CLEANED WHEN 2" OF SEDIMENT HAS ACCUMULATED AT THE INLET. ANY TRASH OR CONSTRUCTION DEBRIS SHALL BE IMMEDIATELY REMOVED.
6. ALL SLOPE AREAS (SHOWN ON SHEET 11) TO BE SEEDED WITH NEW ENGLAND CONSERVATION AND WILDLIFE MIX SHALL BE LOAMED AND SEED WITHIN 1 WEEK OF COMPLETING OF EXCAVATION IN THE AREA. SLOPES TO BE COVERED WITH ECS-1 SINGLE NET STRAW ROLLED EROSION CONTROL BLANKET.
7. ALL OTHER AREA OF SITE GRADING SHALL BE TEMPORARILY LOAMED AND SEEDED WITH A NEW ENGLAND EROSION CONTROL / RESTORATION MIX WITHIN ONE WEEL OF AREAS BEING BROUGHT TO SUB-GRADE.
8. ALL MATERIAL STOCKPILES THAT ARE NOT BEING ACTIVELY USED FOR A PERIOD OF 2 WEEKS SHALL BE COVERED WITH A TARP(S) OR VEGETATED WITH NEW ENGLAND EROSION CONTROL / RESTORATION MIX..

ADDITIONAL EROSION CONTROLS MAY BE REQUIRED DEPENDING ON ACTUAL FIELD CONDITIONS DURING CONSTRUCTION.

LONG TERM:

1. THE DRIVEWAY AND PARKING LOT SHALL BE SWEPT FOUR TIMES PER YEAR WITH ONE BEING AFTER THE LAST WINTER SANDING.
2. THE CATCH SHALL BE INSPECTED 4 TIMES PER YEAR AND SEDIMENT REMOVED WHEN THE DEPTH REACHES 24 INCHES.
3. THE PONDS SHALL BE INSPECTED AND PREVENTIVE MAINTENANCE PERFORMED TWICE PER YEAR. THE PONDS SHALL BE INSPECTED AFTER EVERY STORM EVENT EXCEEDING 1 INCH OF RAINFALL FOR THE FIRST 3 MONTHS AND THEN TWICE PER YEAR THEREAFTER AND WHEN THERE ARE DISCHARGES THROUGH THE HIGH OUTLET.
4. DURING INSPECTIONS OF STORM-WATER FACILITIES ANY TRASH OR DEBRIS DISCOVERED SHALL BE IMMEDIATELY REMOVED.

EROSION CONTROL PLAN – 2
SENIOR VILLAGE
PANTHER WAY
FRANKLIN, MASSACHUSETTS
PREPARED FOR
CAMFORD PROPERTY GROUP, INC.
37 EAST CENTRAL STREET
FRANKLIN, MASSACHUSETTS
DECEMBER 13, 2024
SCALE: 1" = 40'

NOTE:
PROPOSED EROSION CONTROL SHALL CONSIST OF A 12" DIAMETER COMPOST SOCK.

OWNERS:
MAP 270 PARCEL 38
PANTHER WAY 2019 LLC
7 MYRTLE STREET
NORFOLK, MASSACHUSETTS

MAP 270 PARCEL 39
HOLMES LAND TRUST
12 MYRTLE STREET
NORFOLK, MASSACHUSETTS

APPLICANT:
CAMFORD PROPERTY GROUP, INC
37 EAST CENTRAL STREET
FRANKLIN, MASSACHUSETTS

SITE PLAN APPROVAL
REQUIRED
FRANKLIN PLANNING BOARD

DATE

GRAPHIC SCALE
40 0 20 40 80 160
(IN FEET)
1 inch = 40 ft.

NO.	DATE	DESCRIPTION	BY
1	6/20/25	REVIEW COMMENTS	RRG

CARLOS A. QUINTAL P.E. #30812

DATE		INT.
	FIELD BY:	
BK#	FIELD BOOK	PG#
12/24	CALCS BY:	RRG
12/24	DESIGNED BY:	RRG
12/24	DRAWN BY:	COMP
12/24	CHECKED BY:	CAQ

UNITED CONSULTANTS INC.
850 FRANKLIN STREET SUITE 11D
WRENTHAM, MASSACHUSETTS 02093
508-384-6580 FAX 508-384-6566

DATE DEC. 13, 2024
SCALE 1" = 40'
PROJECT UC1378
SHEET 13 OF 17

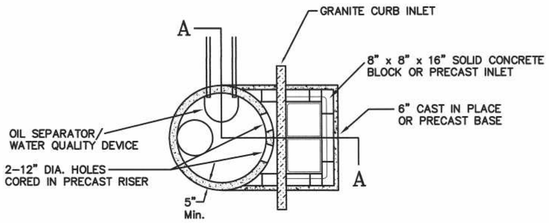

PLAN VIEW

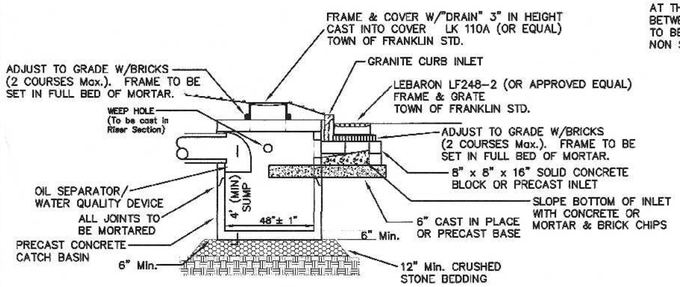

SECTION A-A

DOUBLE GRATE
PRECAST GUTTER INLET
W/ DEEP SUMP
CB - 30 AND CB - 31

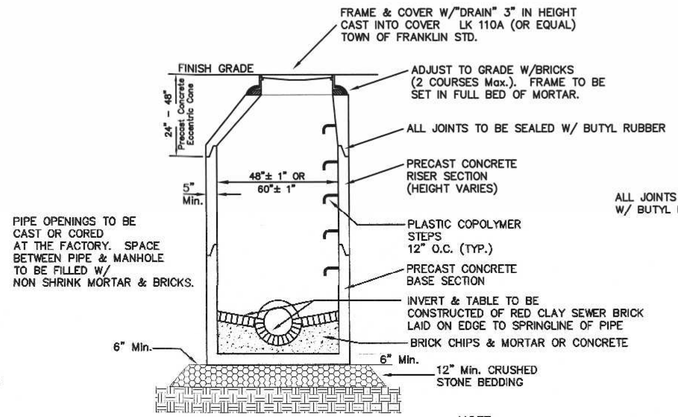

PRECAST DRAIN MANHOLE

NOTE:
DMH'S 7, 8 AND 9 SHALL BE 5' DIAMETER

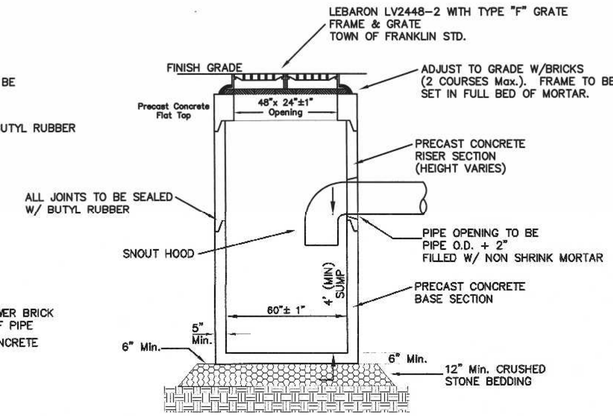

DOUBLE GRATE
PRECAST CATCH BASIN
W/ DEEP SUMP

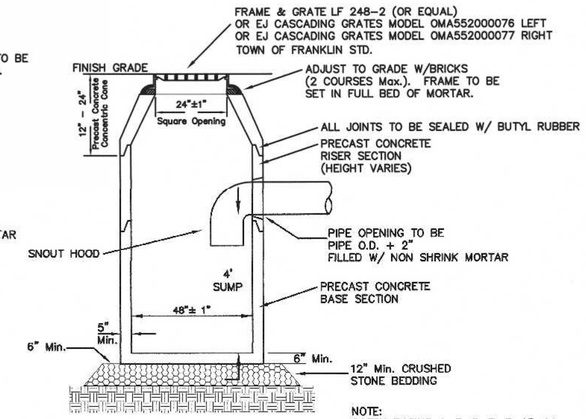

NOTE:
CATCH BASINS 4, 5, 6, 7, 8, 13, 14, 15 AND 16 SHALL HAVE CASCADING GRATES.

PRECAST CATCH BASIN

CB - 41 CB - 43 AND CB - 51

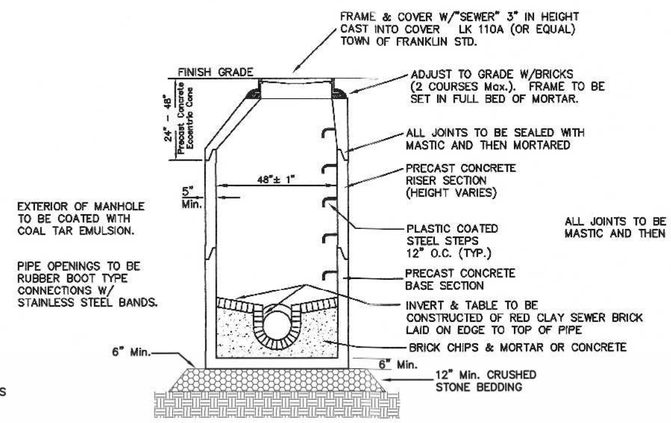

PRECAST SEWER MANHOLE

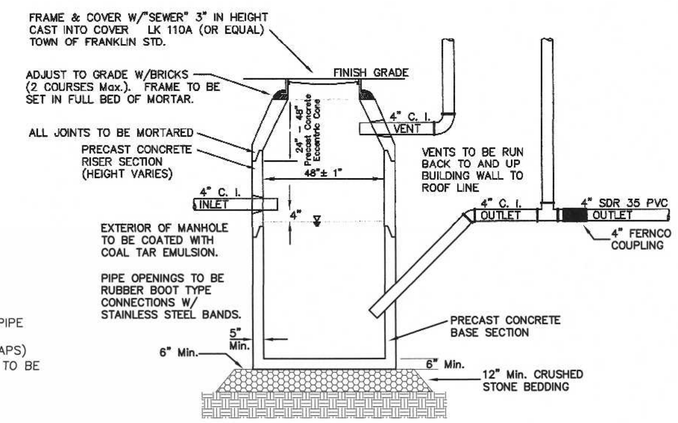

M.D.C. STYLE TRAP

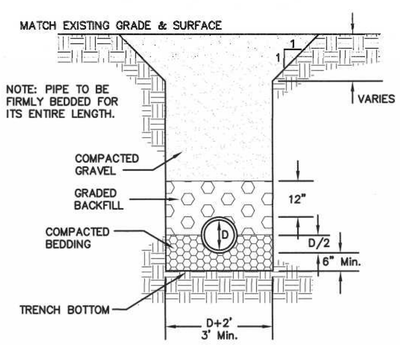

TYPE OF PIPE	RCP DRAIN	CLDI WATER	PVC SEWER	D.I. SEWER
BEDDING MATERIAL	PROC. GRAVEL	SAND	3/4" STONE	3/8" STONE
BACKFILL MATERIAL	ORD. FILL	SAND	3/4" STONE	3/8" STONE

UTILITY TRENCH DETAIL

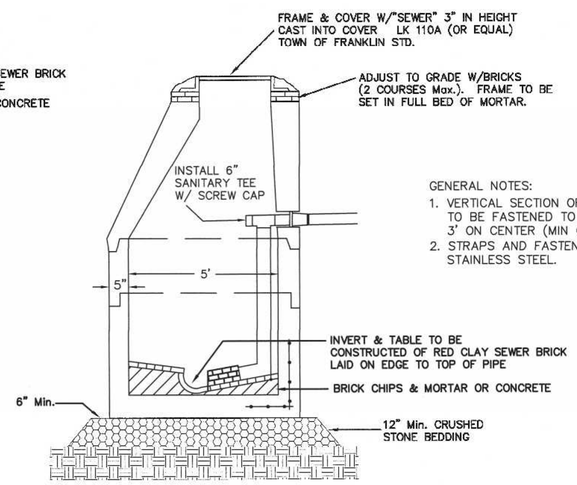

DROP SEWER MANHOLE

NTS

SMH 13 AND SMH 14

GENERAL NOTES:
1. VERTICAL SECTION OF SEWER PIPE TO BE FASTENED TO WALL 3' ON CENTER (MIN OF 2 STRAPS)
2. STRAPS AND FASTENERS ARE TO BE STAINLESS STEEL.

CONTRACTOR TO CONFIRM EXISTING ELEVATIONS AT CONNECTION POINT AND NOTIFY THE DESIGN ENGINEER.

SEWER PIPE TO BE 8" SDR 35. SEWER PIPE SIZE AND TYPE WITHIN 10 FEET OF THE BUILDING SHALL BE PROVIDED BY THE PLUMBING ENGINEER.

MDC MANHOLE VENTING TO BE CONNECTED TO THE BUILDING AT THE DISCRETION OF THE PLUMBING ENGINEER.

CONSTRUCTION DETAILS - 1
SENIOR VILLAGE
PANTHER WAY
FRANKLIN, MASSACHUSETTS
PREPARED FOR
CAMFORD PROPERTY GROUP, INC.
37 EAST CENTRAL STREET
FRANKLIN, MASSACHUSETTS
DECEMBER 13, 2024
SCALE: 1" = 40'

SITE PLAN APPROVAL
REQUIRED
FRANKLIN PLANNING BOARD

DATE

GRAPHIC SCALE
40 0 20 40 80 160
(IN FEET)
1 inch = 40 ft.

NO.	DATE	DESCRIPTION	BY
1	6/20/25	REVIEW COMMENTS	RRG

COMMONWEALTH OF MASSACHUSETTS CARLOS A. QUINTAL CIVIL No. 30812 REGISTERED PROFESSIONAL ENGINEER
CARLOS A. QUINTAL P.E. #30812

DATE		INT.
	FIELD BY:	
BK#	FIELD BOOK	PG#
12/24	CALCS BY:	RRG
12/24	DESIGNED BY:	RRG
12/24	DRAWN BY:	COMP
12/24	CHECKED BY:	CAQ

UNITED CONSULTANTS INC.
850 FRANKLIN STREET SUITE 11D
WRENTHAM, MASSACHUSETTS 02093
508-384-6560 FAX 508-384-6566

DATE DEC. 13, 2024
SCALE 1" = 40'
PROJECT UC1378
SHEET 14 OF 17

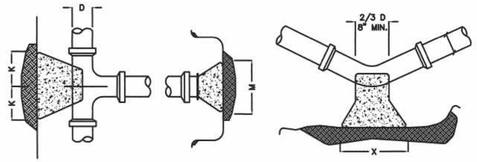

PLAN – TEE AND PLUG

PLAN – HORIZ. AND VERT. BEND

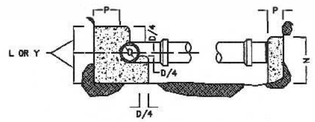

TYPICAL SECTION
TEES, BENDS AND PLUGS

SIZE OF BRANCH	J	K	L	M	N	O
4" TO 8"	10"	10"	1'-0"	2'-0"	1'-6"	10"
10" TO 16"	1'-0"	1'-6"	1'-8"	3'-10"	2'-10"	1'-6"
24"	1'-4"	2'-0"	2'-8"	5'-0"	3'-6"	1'-8"

TEES AND PLUGS

	90 & 45 BENDS			22 1/2 & 11 1/4		
D	4" TO 8"	10" TO 16"	24"	4"TO 8"	10" TO 16"	24"
X	1'-8"	3'-4"	3'-8"	1'-4"	2'-0"	3'-6"
Y	1'-2"	1'-8"	2'-4"	1'-0"	1'-2"	2'-4"

BENDS

THRUST BLOCK DETAILS

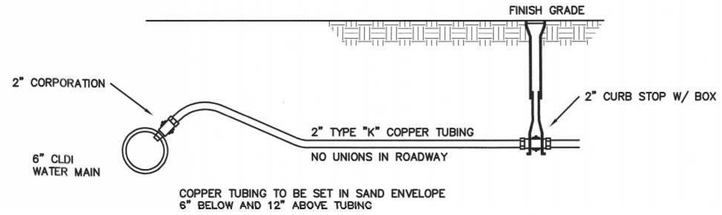

2" DOMESTIC WATER SERVICE

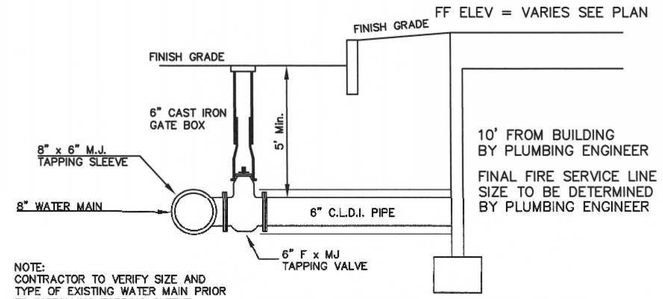

NOTE:
CONTRACTOR TO VERIFY SIZE AND TYPE OF EXISTING WATER MAIN PRIOR TO INSTALLING TAPPING SLEEVE.

FIRE SERVICE CONNECTION

NOTES:
1. CONTRACTOR TO CONTACT DIGSAFE PRIOR TO COMMENCEMENT OF CONSTRUCTION.
2. CONTRACTOR TO VERIFY LOCATIONS OF EXISTING UTILITIES ANY REPORT ANY DISCREPANCIES TO UNITED CONSULTANTS, INC.
3. ALL WORK SHALL CONFORM TO THE TOWN OF FRANKLIN DPW STANDARDS.
4. MAINTAIN A MINIMUM OF 10' SEPARATION FROM THE WATER SERVICE TO THE SEWER SERVICE.

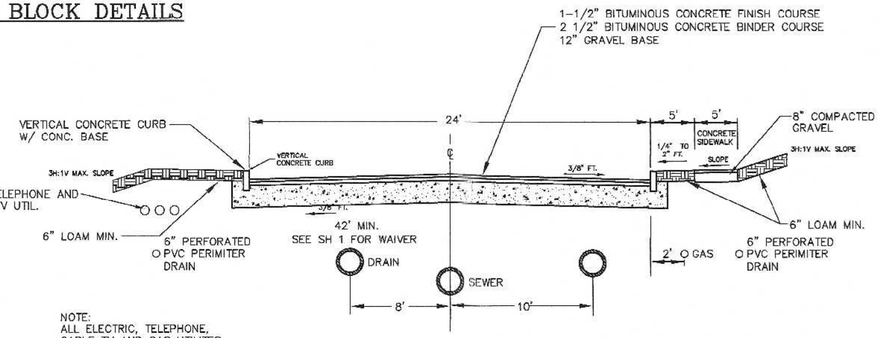

NOTE:
ALL ELECTRIC, TELEPHONE, CABLE TV AND GAS UTILITES SHALL BE INSTALLED UNDERGROUND.

ROADWAY CROSS SECTION

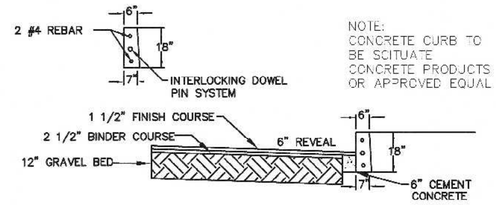

NOTE:
CONCRETE CURB TO BE SCITUATE CONCRETE PRODUCTS OR APPROVED EQUAL

PAVEMENT AND VERTICAL CONCRETE CURBING

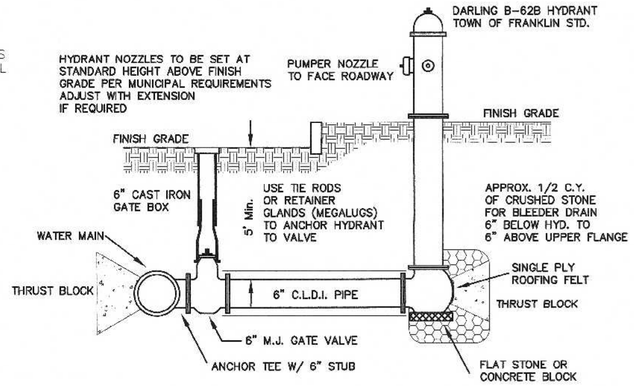

HYDRANT CONNECTION

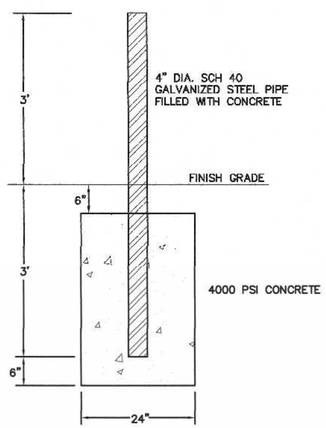

BOLLARD DETAIL

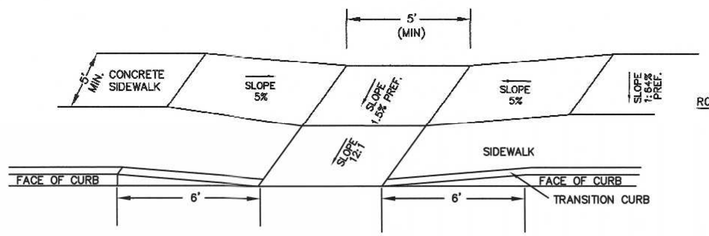

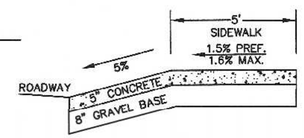

SIDEWALK RAMP SECTION

1. CONCRETE TO BE 4,000 PSI.
2. CONCRETE SHALL BE PLANT MIXED, PLACED, FLOATED, TROWELED AND BROOM FINISHED.
3. CURING AND SEALING COMPOUND SHALL BE APPLIED.

GENERAL NOTES:
1. ALL BLASTING OPERATIONS SHALL BE PERFORMED IN COMPLIANCE WITH ALL TOWN, STATE AND FEDERAL REGULATIONS.
2. ALL CONSTRUCTION SHALL BE IN COMPLIANCE WITH THE TOWN OF FRANKLIN SUBDIVISION RULES AND REGULATIONS AND MASS DOT STANDARDS.
3. LOTS TO BE SERVICED BY ON TOWN WATER AND SEWER.
4. ALL DRAIN PIPE SHALL BE CLASS V REINFORCED CONCRETE PIPE WHERE THERE IS GREATER THAN 3.5' OF COVER. SEE PROFILES FOR PIPE CLASS.
5. MINIMUM DRAIN PIPE DIAMETER IS 12".
6. IT IS THE CONTRACTORS RESPONSIBILITY TO MAINTAIN EROSION CONTROL DEVICES DURING CONSTRUCTION.
7. EROSION CONTROL DEVICES SHALL BE INSTALLED PRIOR TO COMMENCING WITH CONSTRUCTION.
8. TALL PIPE GASKETS SHALL BE PRE-MOLDED NEOPRENE O-RING TYPE IN ACCORDANCE WITH SUBDIVISION REGULATION 300-11B(2)(a).

1. CROSS SLOPE ON ANY RAMP, LANDING OR ACCESSIBLE ROUTE SHALL NOT EXCEED 3/16" PER FOOT.
2. DETECTABLE SURFACES TO BE INSTALLED AT SIDEWALK RAMP ONLY.

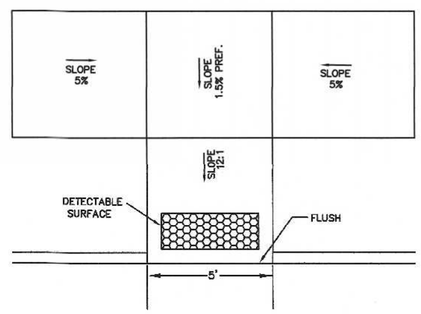

TYP. SIDEWALK RAMP

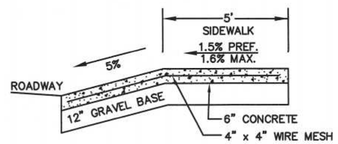

DRIVEWAY APRON SECTION

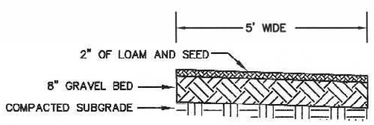

PEDESTRIAN TRAIL DETAIL

PESTRIAN TRAIL NOTES:
1. PROPOSED TRAIL CROSS SLOPE SHALL NOT EXCEED 1.5%.
2. PROPOSED TRAIL LONGITUDINAL SLOPE NOT TO EXCEED 1 IN 12.

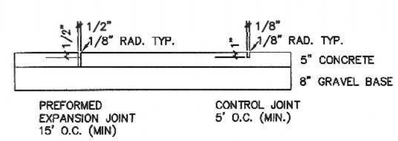

SIDEWALK JOINT DETAIL

CONSTRUCTION DETAILS – 2
SENIOR VILLAGE
PANTHER WAY
FRANKLIN, MASSACHUSETTS
PREPARED FOR
CAMFORD PROPERTY GROUP, INC.
37 EAST CENTRAL STREET
FRANKLIN, MASSACHUSETTS
DECEMBER 13, 2024
SCALE: 1" = 40'

SITE PLAN APPROVAL
REQUIRED
FRANKLIN PLANNING BOARD

DATE

GRAPHIC SCALE
40 0 20 40 80 160
(IN FEET)
1 inch = 40 ft.

NO.	DATE	DESCRIPTION	BY
1	6/20/25	REVIEW COMMENTS	RRG

COMMONWEALTH OF MASSACHUSETTS
CARLOS A. QUINTAL
CIVIL
No. 30812
REGISTERED PROFESSIONAL ENGINEER
CARLOS A. QUINTAL P.E. #30812

DATE		INT.
	FIELD BY:	
BK#	FIELD BOOK	PG#
12/24	CALCS BY:	RRG
12/24	DESIGNED BY:	RRG
12/24	DRAWN BY:	COMP
12/24	CHECKED BY:	CAQ

UNITED CONSULTANTS INC.
850 FRANKLIN STREET SUITE 11D
WRENTHAM, MASSACHUSETTS 02093
508-384-6560 FAX 508-384-6566

DATE	DEC. 13, 2024
SCALE	1" = 40'
PROJECT	UC1378
SHEET	15 OF 17

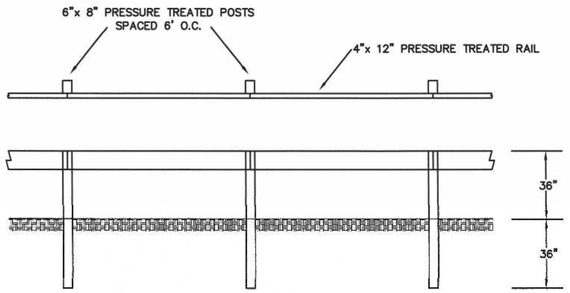

WOODEN GUARDRAIL DETAIL
N.T.S.

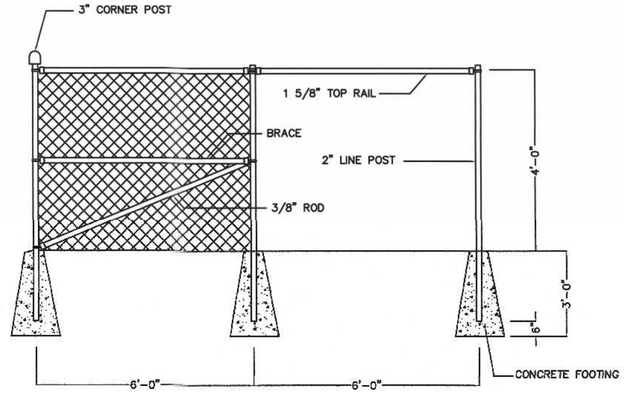

CHAIN LINK FENCE - CORNER & LINE SECTION

NOT TO SCALE

NOTE: CHAIN LINK FENCE TO BE INSTALLED AT RETAINING WALLS EXCEEDING 4' IN HEIGHT.

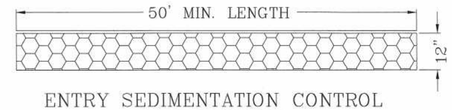

ENTRY SEDIMENTATION CONTROL MAT SECTION
N.T.S.

NOTES:
1. PAD SHALL BE A MINIMUM OF 20 FEET IN WIDTH. EXISTING ASPHALT DRIVE TO REMAIN IN PLACE UNTIL FINAL PAVEMENT IS TO BE INSTALLED.
2. PAD SHALL CONSIST OF 4" STONE 8" MIN. DEPTH AND THEN TOP DRESSED WITH 4" OF 1" – 2" WASHED STONE.

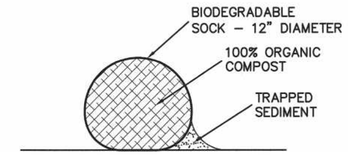

COMPOST SOCK DETAIL

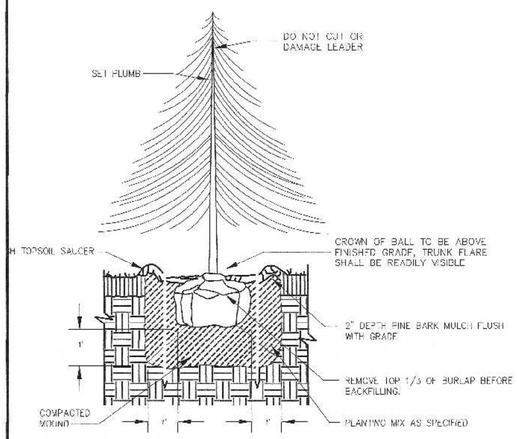

EVERGREEN TREE PLANTING
NTS

SEWER AND WATER CROSSING NOTES:
1. WHEN POSSIBLE SEWER LINE SHALL BE CONSTRUCTED A MINIMUM OF 18" BELOW WATER LINES.
2. IF SEWER LINES ARE CONSTRUCTED WITHIN 18" OF THE WATER LINE OR ABOVE THE WATER LINE THE SEWER LINE SHALL BE ENCASED IN CONCRETE PER THE DETAIL.

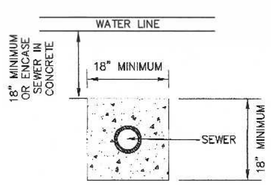

SEWER AND WATER CROSSING DETAIL

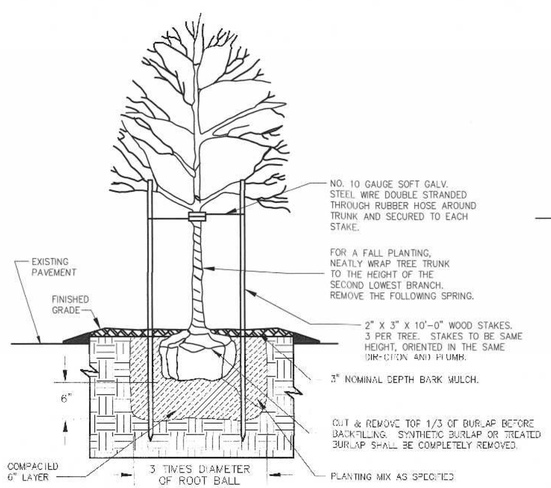

DECIDUOUS TREE PLANTING

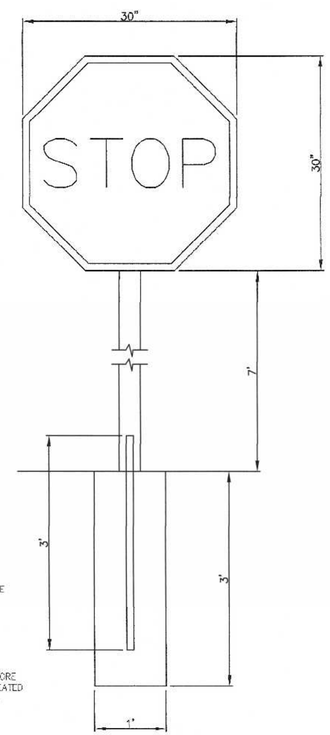

STOP SIGN DETAIL
N.T.S

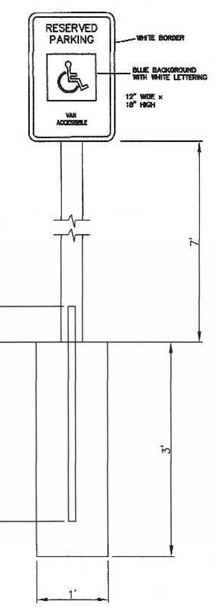

VAN ACCESSIBLE HANDICAP SIGN DETAIL
N.T.S

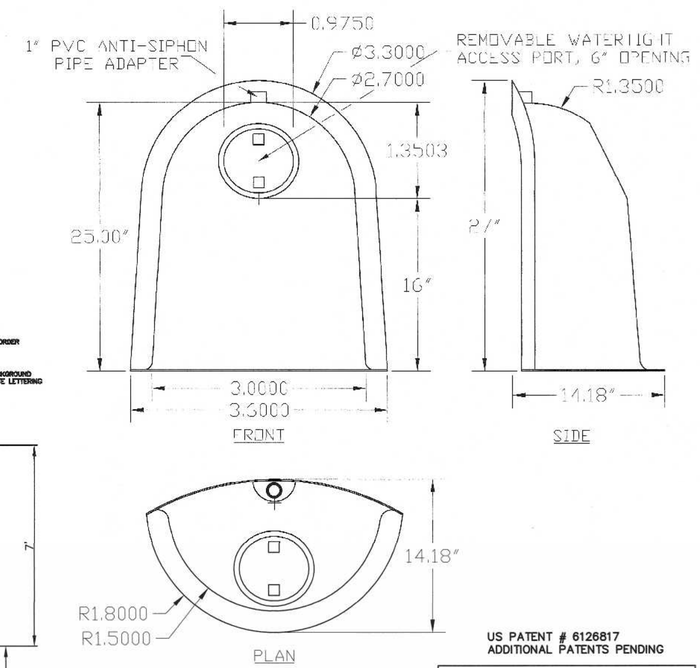

DESIGNED TO FIT 48"-60" DIAM. STRUCTURES

US PATENT # 6126817
ADDITIONAL PATENTS PENDING

BMP, INC.
53 MT. ARCHER ROAD, LYME, CT. 06371
(800) 504-8008 FAX: (860)434-3195

DESCRIPTION	DATE	SCALE
18R SNOUT OIL & DEBRIS STOP	09/06/99	NONE
	DRAWING NUMBER 18R	

SNOUT DETAIL

CONSTRUCTION DETAILS – 3
SENIOR VILLAGE
PANTHER WAY
FRANKLIN, MASSACHUSETTS
PREPARED FOR
CAMFORD PROPERTY GROUP, INC.
37 EAST CENTRAL STREET
FRANKLIN, MASSACHUSETTS
DECEMBER 13, 2024
SCALE: 1" = 40'

SITE PLAN APPROVAL
REQUIRED
FRANKLIN PLANNING BOARD

DATE

GRAPHIC SCALE
40 0 20 40 80 160
(IN FEET)
1 inch = 40 ft.

NO.	DATE	DESCRIPTION	BY
1	6/20/25	REVIEW COMMENTS	RRG

COMMONWEALTH OF MASSACHUSETTS
CARLOS A. QUINTAL
CIVIL
No. 30812
REGISTERED PROFESSIONAL ENGINEER

CARLOS A. QUINTAL P.E. #30812

DATE		INT.
	FIELD BY:	
BK#	FIELD BOOK	PG#
12/24	CALCS BY:	RRG
12/24	DESIGNED BY:	RRG
12/24	DRAWN BY:	COMP
12/24	CHECKED BY:	CAQ

UNITED CONSULTANTS INC.
850 FRANKLIN STREET SUITE 11D
WRENTHAM, MASSACHUSETTS 02093
508-384-6560 FAX 508-384-6566

DATE	DEC. 13, 2024
SCALE	1" = 40'
PROJECT	UC1378
SHEET	16 OF 17

Typical Siltsack® Construction - Type B

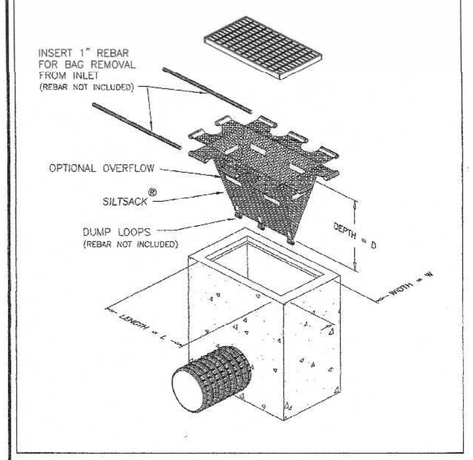

SILT SAK DETAIL
N.T.S.

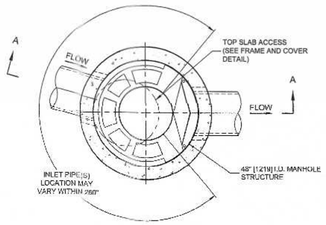

PLAN VIEW B-B
NOT TO SCALE

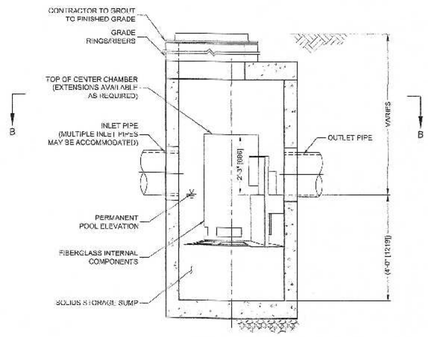

ELEVATION A-A
NOT TO SCALE

CASCADE separator™

CASCADE SEPARATOR DESIGN NOTES

CS-4 RATED TREATMENT CAPACITY IS 2.0 CFS, OR PER LOCAL REGULATIONS.
THE STANDARD CS-4 CONFIGURATION IS SHOWN. ALTERNATE CONFIGURATIONS ARE AVAILABLE AND ARE LISTED BELOW. SOME CONFIGURATIONS MAY BE COMBINED TO SUIT SITE REQUIREMENTS.

CONFIGURATION DESCRIPTION
GRATED INLET ONLY (NO INLET PIPE)
GRATED INLET WITH INLET PIPE OR PIPES
CURB INLET ONLY (NO INLET PIPE)
CURB INLET WITH INLET PIPE OR PIPES

FRAME AND COVER
(DIAMETER VARIES)
NOT TO SCALE

SITE SPECIFIC DATA REQUIREMENTS

STRUCTURE ID			
WATER QUALITY FLOW RATE (cfs [L/s])			
PEAK FLOW RATE (cfs [L/s])			
RETURN PERIOD OF PEAK FLOW (yrs)			
RIM ELEVATION			
PIPE DATA:	INVERT	MATERIAL	DIAMETER
INLET PIPE 1			
INLET PIPE 2			
OUTLET PIPE			
NOTES / SPECIAL REQUIREMENTS:			

GENERAL NOTES
1. CONTECH TO PROVIDE ALL MATERIALS UNLESS NOTED OTHERWISE.
2. FOR SITE SPECIFIC DRAWINGS WITH DETAILED STRUCTURE DIMENSIONS AND WEIGHT, PLEASE CONTACT YOUR CONTECH ENGINEERED SOLUTIONS LLC REPRESENTATIVE, www.ContechES.com
3. CASCADE SEPARATOR WATER QUALITY STRUCTURE SHALL BE IN ACCORDANCE WITH ALL DESIGN DATA AND INFORMATION CONTAINED IN THIS DRAWING. CONTRACTOR TO CONFIRM STRUCTURE MEETS REQUIREMENTS OF PROJECT.
4. CASCADE SEPARATOR STRUCTURE SHALL MEET AASHTO HS20 LOAD RATING, ASSUMING EARTH COVER OF 0' - 2' [610], AND GROUNDWATER ELEVATION AT, OR BELOW, THE OUTLET PIPE INVERT ELEVATION. PROVIDE TO CONTECH ACTUAL GROUNDWATER ELEVATION.
5. CASTINGS SHALL MEET AASHTO M306 AND BE CAST WITH THE CONTECH LOGO.
6. CASCADE SEPARATOR STRUCTURE SHALL BE PRECAST CONCRETE CONFORMING TO ASTM C478 AND AASHTO LOAD FACTOR DESIGN METHOD.
7. ALTERNATE UNITS ARE SHOWN IN MILLIMETERS [mm].

INSTALLATION NOTES
A. ANY SUB-BASE, BACKFILL DEPTH, AND/OR ANTI-FLOTATION PROVISIONS ARE SITE-SPECIFIC DESIGN CONSIDERATIONS AND SHALL BE SPECIFIED BY ENGINEER OF RECORD.
B. CONTRACTOR TO PROVIDE EQUIPMENT WITH SUFFICIENT LIFTING AND REACH CAPACITY TO LIFT AND SET THE CASCADE SEPARATOR MANHOLE STRUCTURE.
C. CONTRACTOR TO INSTALL JOINT SEALANT BETWEEN ALL STRUCTURE SECTIONS AND ASSEMBLE STRUCTURE.
D. CONTRACTOR TO PROVIDE, INSTALL, AND GROUT INLET AND OUTLET PIPE(S). MATCH PIPE INVERTS WITH ELEVATIONS SHOWN. ALL PIPE CENTERLINES TO MATCH PIPE OPENING CENTERLINES.
E. CONTRACTOR TO TAKE APPROPRIATE MEASURES TO ASSURE UNIT IS WATER TIGHT, HOLDING WATER TO FLOWLINE INVERT MINIMUM. IT IS SUGGESTED THAT ALL JOINTS BELOW PIPE INVERTS ARE GROUTED.

CONTECH ENGINEERED SOLUTIONS LLC
www.contechES.com
9025 Centre Pointe Dr. Suite 400, West Chester, OH 45069
800-338-1122 513-645-7000 513-645-7993 FAX

CS-4
CASCADE SEPARATOR
STANDARD DETAIL

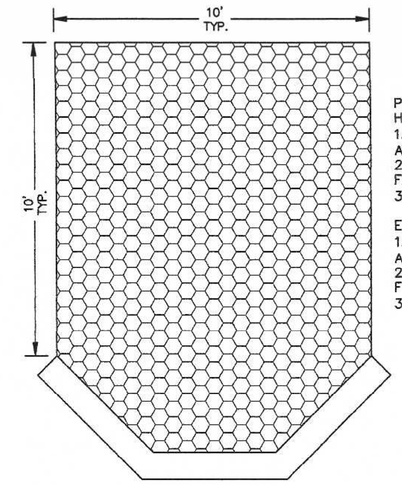

PIPE OUTLET PROTECTION NOTES:
HW-30 AND OUTLET 32
1. RIP RAP TO BE MAXIMUM OF 18" AVERAGE OF 12" AND MINIMUM OF 6".
2. RIP RAP TO BE PLACED OVER A FILTER FABRIC.
3. RIP RAP MINIMUM DEPTH SHALL BE 24"

EXISTING HW AREA
1. RIP RAP TO BE MAXIMUM OF 21" AVERAGE OF 14" AND MINIMUM OF 6".
2. RIP RAP TO BE PLACED OVER A FILTER FABRIC.
3. RIP RAP MINIMUM DEPTH SHALL BE 28"

RIP RAP AT HEADWALL
N.T.S.

CONSTRUCTION PERIOD INFILTRATION POND NOTES:
CONTRACTOR TO COMPLETE EXCAVATION OF PONDS 2, 3 AND 5 WHEN NO RAIN IS PRESENT AND NOT IN THE WINTER. TO PREVENT SOIL COMPACTION, USE ONLY LIGHT EARTH MOVING EQUIPMENT WITHIN THE INFILTRATION BASIN AREAS. IF NECESSARY TILL THE BOTTOM OF THE INFILTRATION BASIN AREAS TO A DEPTH OF 12 INCHES.

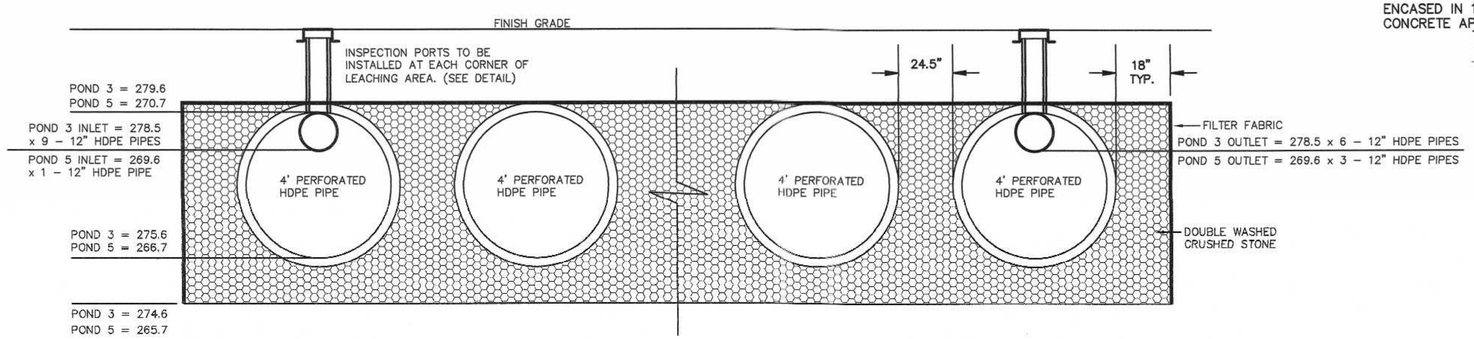

INFILTRATION PONDS 3, AND 5

NOTE:
INFILTRATION POND 3 CONSISTS OF 9 ROWS OF 4' DIAMETER PERFORATED HDPE PIPE 64' IN LENGTH. STONE AREA = 59.83' x 67.0'
INFILTRATION POND 5 CONSISTS OF 7 ROWS OF 4' DIAMETER PERFORATED HDPE PIPE 3 @ 90' 4 @ 55' IN LENGTH. STONE AREA = 46.75' WIDE x 58' AND 93' LONG (SEE PLAN)

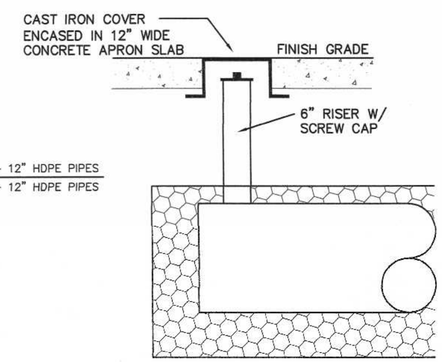

INSPECTION PORT DETAIL
DRAINAGE INFILTRATION AREAS
N.T.S.

NOTE:
1. ALL EXPOSED EDGES SHALL HAVE A 1" CHAMFER
2. CAST WITH # 4 REBAR AT 12: O.C. EACH WAY

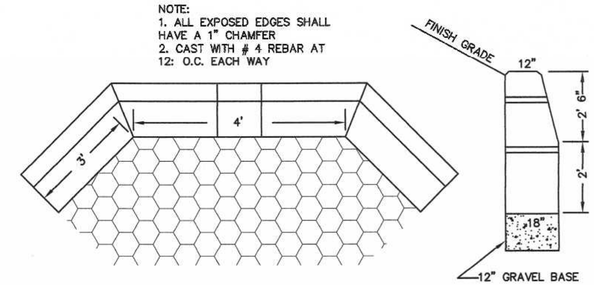

TYPE "B" PRECAST HEADWALL
FOR HEADWALL 30

CONSTRUCTION DETAILS – 4
SENIOR VILLAGE
PANTHER WAY
FRANKLIN, MASSACHUSETTS
PREPARED FOR
CAMFORD PROPERTY GROUP, INC.
37 EAST CENTRAL STREET
FRANKLIN, MASSACHUSETTS
DECEMBER 13, 2024
SCALE: 1" = 40'

SITE PLAN APPROVAL
REQUIRED
FRANKLIN PLANNING BOARD

DATE

GRAPHIC SCALE
40 0 20 40 80 160
(IN FEET)
1 inch = 40 ft.

NO.	DATE	DESCRIPTION	BY
1	6/20/25	REVIEW COMMENTS	RRG

COMMONWEALTH OF MASSACHUSETTS
CARLOS A. QUINTAL
CIVIL
No. 30812
REGISTERED PROFESSIONAL ENGINEER

CARLOS A. QUINTAL P.E. #30812

DATE		INT.
	FIELD BY:	
BK#	FIELD BOOK	PG#
12/24	CALCS BY:	RRG
12/24	DESIGNED BY:	RRG
12/24	DRAWN BY:	COMP
12/24	CHECKED BY:	CAQ

UNITED CONSULTANTS INC.
850 FRANKLIN STREET SUITE 11D
WRENTHAM, MASSACHUSETTS 02093
508-384-6560 FAX 508-384-6566

DATE DEC. 13, 2024
SCALE 1" = 40'
PROJECT UC1378
SHEET 17 OF 17