SITE PLAN MODIFICATION
70, 72, 88 AND 94 EAST CENTRAL STREET

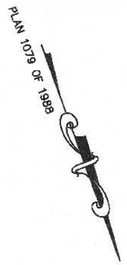

LOCUS MAP
SCALE: 1" = 100'

70 AND 72 EAST CENTRAL STREET PROPERTY ARE LOCATED WITHIN A DOWNTOWN COMMERCIAL ZONE.
88 AND 94 EAST CENTRAL STREET PROPERTY ARE LOCATED WITHIN A COMMERCIAL I ZONE.
ZONING TABLE VALUES FOR #94 AND # 88 EAST CENTRAL STREET ARE BASED ON PARCELS "A" AND "B" BEING PART OF #94 EAST CENTRAL STEET AND ARE NOT REFLECTED AS PART OF # 88 EAST CENTRAL STREET.

#88 AND 94 EAST CENTRAL STREET – COMMERCIAL I ZONING DISTRICT

	REQUIREMENTS:	EXISTING	PROPOSED
AREA:	5,000 S.F.	54,614± S.F.	54,614± S.F.
FRONTAGE:	50'	159.43'	159.43'
DEPTH:	50'	271'	271'
HEIGHT:	3 STORIES – 40' *15	2 STORIES	# 94 3 STORIES < 40' SEE ARCHITECTURAL PLANS
WIDTH:	45'	163.5'	163.5'
SETBACKS			
FRONT:	20' *1	160.3'	172.5'
SIDE:	10' *14	24.6'	11.0'
REAR:	15'	35.5'	17.2'
COVERAGE			
STRUCTURES:	80%	6.9%	19.3%
STRUC. & PAVING:	90%	15.4%	46.1%

#70–72 EAST CENTRAL STREET – DOWNTOWN COMMERCIAL ZONING DISTRICT

	REQUIREMENTS:	EXISTING	PROPOSED
DOWNTOWN COM.			
AREA:	5,000 S.F.	32,810 S.F.	32,810± S.F.
FRONTAGE:	50'	186.07'	186.07'
DEPTH:	50'	266'	266'
HEIGHT:	3 STORIES – 40' *9	2 STORIES	4 STORIES – 49.5'
WIDTH:	45'	>45'	>45'
COVERAGE –			
STRUCTURES:	80%	7.6%	26%
STRUC. & PAVING:	90%	19.2%	67.7%
SETBACKS–			
FRONT:	15' *10	20.7'	15.7'
SIDE:	0' *2	25.2'	15.0' & 5'
REAR:	15'	105'	23.3' & 17.5'

THE ABOVE INFORMATION WAS TAKEN FROM THE APPROVED SITE PLAN FOR 70 – 72 EAST CENTRAL STREET.

*1 – BUT NO NEW STRUCTURE SHALL BE REQUIRED TO PROVIDE A DEEPER YARD THAN EXISTED ON THAT PARCEL UPON ADOPTION OF THIS AMENDMENT.
*14 – THE 10–FOOT SIDE SETBACK IS ONLY REQUIRED ON ONE SIDE OF THE LOT; IF LOT ABUTS A RESIDENTIAL DISTRICT, A 20–FOOT SETBACK IS REQUIRED ON THE ABUTTING SIDE.
*15 – BUILDINGS UP TO 50 FEET IN HEIGHT, REGARDLESS OF THE NUMBER OF STORIES, MAY BE PERMITTED BY A SPECIAL PERMIT FROM THE PLANNING BOARD.

REQUIREMENTS FOR 94 EAST CENTRAL STREET ZONE COMMERCIAL 1
EXISTING AND PROPOSED LOT AREA, FRONTAGE, DEPTH, WIDTH AND COVERAGE BASED ON THE LOTS BEING COMBINED.
BUILDING HEIGHT, AND SETBACKS BASED ON EXISTING AND PROPOSED BUILDINGS LOCATED ON 88 AND 94 EAST CENTRAL STREET.
PROPERTY IS NOT LOCATED WITHIN A FRANKLIN WATER RESOURCE DISTRICT.
THE PROPERTY IS LOCATED IN A ZONE C BASED ON FEMA FIRM MAP 25021C0309E DATED JULY 17, 2012.

94 EAST CENTRAL STREET:
EXISTING BUILDING USE RESIDENTIAL.
PROPOSED BUILDING USE MIXED WITH RESIDENTIAL.

88 EAST CENTRAL STREET
EXISTING BUILDING USE RESIDENTIAL.

70–72 EAST CENTRAL STREET
CURRENT BUILDING USE MIXED WITH RESIDENTIAL.

– ALL EROSION CONTROL MITIGATION MEASURES SHALL BE IN PLACE PRIOR TO MAJOR CONSTRUCTION OR SOIL DISTURBANCE COMMENCING ON THE SITE.

WAIVER REQUESTS:
1. TO ALLOW LESS THAN 42" OF COVER OVER THE RCP DRAIN PIPE. PROPOSED CLASS V RCP.
2. TO ALLOW THE USE OF HPDE PIPE FROM CATCH BASIN 92 TO THE UNDERGROUND POND, FROM THE UNDERGROUNG POND TO DRAIN MANHOLE 93, THE ROOF LEADER COLLECTION SYSTEM AND FROM ROOF LEADER CONNECTION TO DMH 95.
3. TO ALLOW THE SITE LIGHTING TO EXTEND PAST THE PROPERTY LINE.

REFERENCES:
ASSESSORS MAP 286 PARCELS 32, 33 AND 34
DEED BOOK 36860 PAGE 516
DEED BOOK 35983 PAGE 116
DEED BOOK 24648 PAGE 492
PLAN 108 OF 1908
PLAN 576 OF 1900
OWNERS PLAN OF LAND BY GUERRIERE AND HALNON, INC
DATED OCTOBER 22, 2018
PLAN 3334 OF 1913
PLAN 853 OF 1928

DRAWING INDEX:

1. COVER SHEET
2. EXISTING CONDITIONS PLAN
3. SITE LAYOUT PLAN
4. SITE GRADING AND UTILITY PLAN
5. SITE PLANTING PLAN
6. EROSION CONTROL PLAN
7. CONSTRUCTION DETAILS
8. CONSTRUCTION DETAILS
9. CONSTRUCTION DETAILS
SITE LIGHTING–LIGHTING PLAN, PHOTOMETRICS AND SCHEDULES BY SK & ASSOCIATES

OWNER:
MAP 286 PARCELS 32 AND 34
70 EAST CENTRAL STREET, LLC
37 EAST CENTRAL STREET
FRANKLIN, MASSACHUSETTS

OWNER MAP 286 PARCEL 33
JOHN AND CARMEL SHERRY
88 EAST CENTRAL STREET

APPLICANT:
70 EAST CENTRAL STREET, LLC
37 EAST CENTRAL STREET
FRANKLIN, MASSACHUSETTS

SITE PLAN MODIFICATION
COVER SHEET
70, 72, 88 AND 94 EAST CENTRAL STREET
FRANKLIN, MASSACHUSETTS
PREPARED FOR
70 EAST CENTRAL STREET, LLC
37 EAST CENTRAL STREET
FRANKLIN, MASSACHUSETTS
DECEMBER 24, 2021
SCALE: 1" = 100'

COMMONWEALTH OF MASSACHUSETTS
CARLOS A. QUINTAL
CIVIL
No. 30812
REGISTERED PROFESSIONAL ENGINEER

CARLOS A. QUINTAL P.E. #30812

SITE PLAN APPROVAL
REQUIRED
FRANKLIN PLANNING BOARD

DATE

GRAPHIC SCALE
100 0 50 100 200 400
(IN FEET)
1 inch = 100 ft.

NO.	DATE	DESCRIPTION	BY

DATE		INT.
6/19	FIELD BY:	BL
BK#	FIELD BOOK	PG#
12/21	CALCS BY:	RRG
12/21	DESIGNED BY:	RRG
12/21	DRAWN BY:	COMP
12/21	CHECKED BY:	CAQ

UNITED CONSULTANTS INC.
850 FRANKLIN STREET SUITE 11D
WRENTHAM, MASSACHUSETTS 02093
508–384–6560 FAX 508–384–6566

DATE DEC. 24, 2021
SCALE 1" = 100'
PROJECT UC1334
SHEET 1 of 9

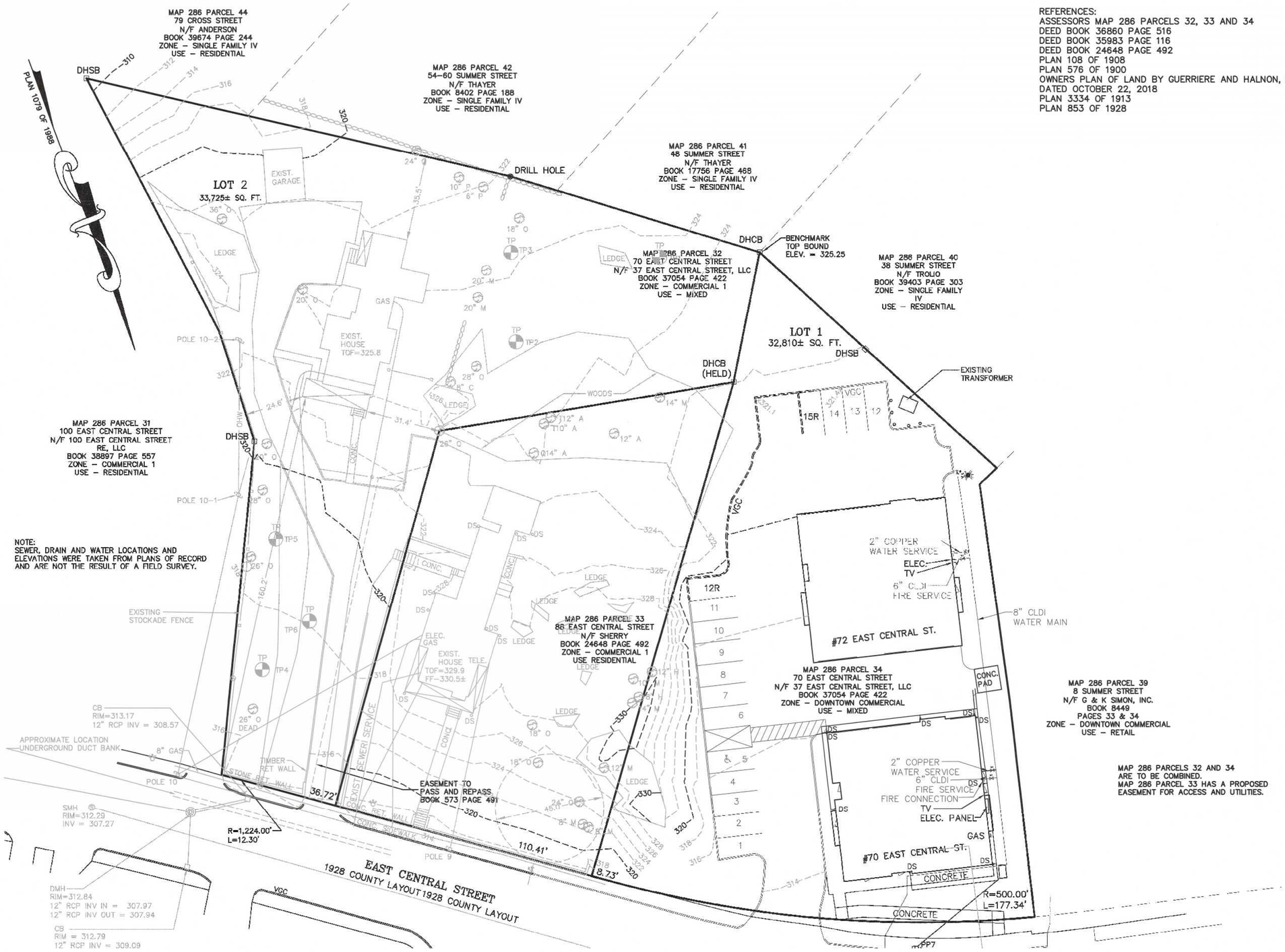

REFERENCES:
ASSESSORS MAP 286 PARCELS 32, 33 AND 34
DEED BOOK 36860 PAGE 516
DEED BOOK 35983 PAGE 116
DEED BOOK 24648 PAGE 492
PLAN 108 OF 1908
PLAN 576 OF 1900
OWNERS PLAN OF LAND BY GUERRIERE AND HALNON, INC
DATED OCTOBER 22, 2018
PLAN 3334 OF 1913
PLAN 853 OF 1928

NOTES:
1. ELEVATIONS DATUM NGVD 1929.
2. EXISTING CONDITIONS SURVEY WAS COMPLETED BETWEEN JUNE 12, 2019 AND JANUARY 6, 2020.
3. SOIL TYPES TAKEN FROM SOILS MAP OF NORFOLK COUNTY.

COMMONWEALTH OF MASSACHUSETTS
ANDREW C. MURPHY
No. 35042
PROFESSIONAL LAND SURVEYOR

1/28/22

ANDREW C. MURPHY P.L.S. #35042

LEGEND:

□ DHSB	DRILL HOLE STONE BOUND
--297--	EXISTING COUNTOUR
—297—	PROPOSED COUNTOUR
x274.3	SPOT GRADE – PROPOSED
x274.3EX.	SPOT GRADE – EXISTING
48M	EXIST. TREE – DIAMETER – SPECIES
UP4-1	UTILITY POLE
—OHW—	OVERHEAD WIRES
	GAS GATE
	WATER CURB STOP
	WATER GATE
	FIRE HYDRANT
	DRAIN MANHOLE
	CATCH BASIN
	SEWER MANHOLE
D	DUMPSTER
VCC	VERTICAL CONCRETE CURBING
VGC	VERTICAL GRANITE CURBING
	HANDICAP PARKING SPACE
	BUILDING MOUNTED LIGHT
	POLE MOUNTED LIGHT

OWNER:
MAP 286 PARCELS 32 AND 34
70 EAST CENTRAL STREET, LLC
37 EAST CENTRAL STREET
FRANKLIN, MASSACHUSETTS

OWNER MAP 286 PARCEL 33
JOHN AND CARMEL SHERRY
88 EAST CENTRAL STREET

APPLICANT:
70 EAST CENTRAL STREET, LLC
37 EAST CENTRAL STREET
FRANKLIN, MASSACHUSETTS

SITE PLAN MODIFICATION
EXISTING CONDITIONS PLAN
70, 72, 88 AND 94 EAST CENTRAL STREET
FRANKLIN, MASSACHUSETTS
PREPARED FOR
70 EAST CENTRAL STREET, LLC
37 EAST CENTRAL STREET
FRANKLIN, MASSACHUSETTS
DECEMBER 24, 2021
SCALE: 1" = 20'

SITE PLAN APPROVAL
REQUIRED
FRANKLIN PLANNING BOARD

DATE

GRAPHIC SCALE
20 0 10 20 40 80
(IN FEET)
1 inch = 20 ft.

NO.	DATE	DESCRIPTION	BY

DATE		INT.
6/19	FIELD BY:	BL
BK#	FIELD BOOK	PG#
12/21	CALCS BY:	RRG
12/21	DESIGNED BY:	RRG
12/21	DRAWN BY:	COMP
12/21	CHECKED BY:	CAQ

UNITED CONSULTANTS INC.
850 FRANKLIN STREET SUITE 11D
WRENTHAM, MASSACHUSETTS 02093
508-384-6560 FAX 508-384-6566

DATE DEC. 24, 2021
SCALE 1" = 20'
PROJECT UC1334
SHEET 2 of 9

NOTE:
THE SITE USES ARE NOT ANTICIPATED TO REQUIRE A LOADING AREA HOWEVER THE FOLLOWING PROVISIONS HAVE BEEN LISTED.

A SU-30 TRUCK (LARGEST DELIVERY VEHICLE TO ACCESS THE SITE) WILL BE ABLE TO ACCESS THE SITE AND WOULD BE ABLE TO TRAVEL THROUGH THE 70 EAST CENTRAL STREET SITE DRIVEWAY. THE TRUCK COULD OFF LOAD AT THE DRIVEWAY CONNECTING THE PARKING AREAS.

OWNER:
MAP 286 PARCELS 32 AND 34
70 EAST CENTRAL STREET, LLC
37 EAST CENTRAL STREET
FRANKLIN, MASSACHUSETTS

OWNER MAP 286 PARCEL 33
JOHN AND CARMEL SHERRY
88 EAST CENTRAL STREET

APPLICANT:
70 EAST CENTRAL STREET, LLC
37 EAST CENTRAL STREET
FRANKLIN, MASSACHUSETTS

NOTES:
- NO SITE SIGNS ARE PROPOSED AT THIS TIME. ONCE TENANTS ARE SECURED THE TENANT AND OR DEVELOPER WILL SUBMIT AND OBTAIN APPROVAL FOR SIGNS. AT THIS TIME THE DEVELOPER IS PLANNING TO UTILIZE BUILDING MOUNTED SIGNAGE THAT WILL COMPLY WITH THE TOWN OF FRANKLIN REQUIREMENTS.

MAP 286 PARCELS 32 AND 34
ARE TO BE COMBINED.
MAP 286 PARCEL 33 HAS A PROPOSED
EASEMENT FOR ACCESS AND UTILITIES.

LEGEND:

- □ DHSB DRILL HOLE STONE BOUND
- --297-- EXISTING COUNTOUR
- —297— PROPOSED COUNTOUR
- x274.3 SPOT GRADE – PROPOSED
- x274.3EX. SPOT GRADE – EXISTING
- 48M EXIST. TREE – DIAMETER – SPECIES
- UP4-1 UTILITY POLE
- —OHW— OVERHEAD WIRES
- GAS GATE
- WATER CURB STOP
- WATER GATE
- FIRE HYDRANT
- DRAIN MANHOLE
- CATCH BASIN
- SEWER MANHOLE
- D DUMPSTER
- VCC VERTICAL CONCRETE CURBING
- VGC VERTICAL GRANITE CURBING
- HANDICAP PARKING SPACE
- BUILDING MOUNTED LIGHT
- POLE MOUNTED LIGHT

NOTE:
ALL SITE CURBING TO BE VETICAL GRANITE.

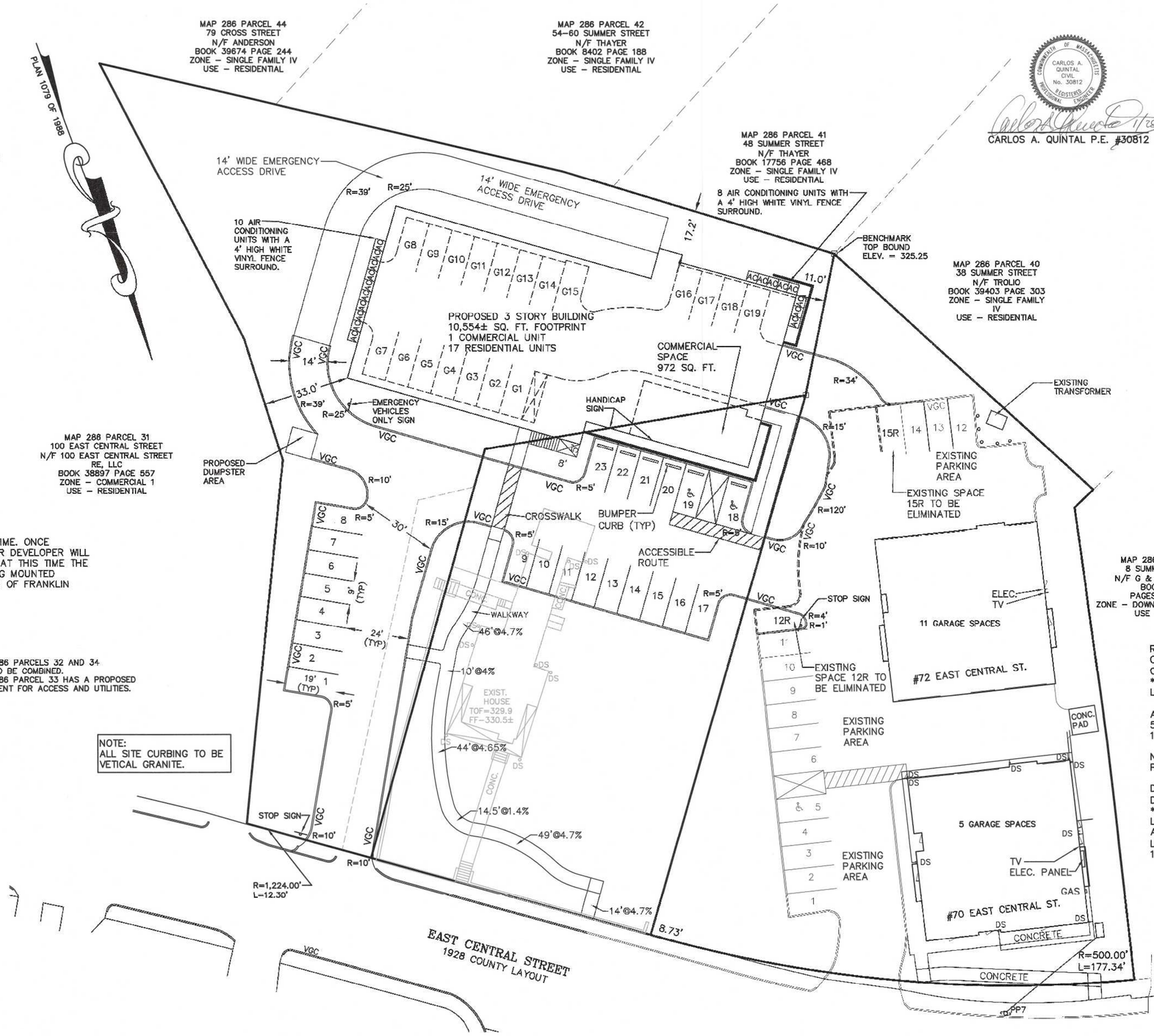

COMMONWEALTH OF MASSACHUSETTS
CARLOS A. QUINTAL
CIVIL
No. 30812
REGISTERED PROFESSIONAL ENGINEER

CARLOS A. QUINTAL P.E. #30812

PARKING CALCULATIONS:
#94 EAST CENTRAL STREET
COMMERCIAL I REQUIREMENTS (SECTIONS 185-21B.(2)(a)
#94 EAST CENTRAL STREET
1.5 SPACES PER RESIDENTIAL DWELLING UNIT.
17 RESIDENTIAL UNITS PROPOSED REQUIRES 27 SPACES
19 GARAGE SPACES ARE PROPOSED FOR THE RESIDENTIAL UNITS
COMMERCIAL SPACE (NON RESIDENTIAL USE) 1 SPACE PER 500 SQ. FT. = 972 SQ. FT. / 500 = 2 SPACES REQUIRED
29 TOTAL SPACES REQUIRED.

42 TOTAL PARKING SPACES PROPOSED INCLUDING 2 HANDICAP SPACES.

PARKING CALCULATIONS 70 AND 72 EAST CENTRAL STREET SITE PLAN APPROVAL:
DOWNTOWN COMMERCIAL REQUIREMENTS (SECTIONS 185-21(3)(a) & (b)
1.5 SPACES PER RESIDENTIAL DWELLING UNIT.
12 RESIDENTIAL UNITS PROPOSED REQUIRES 18 SPACES
20 GARAGE SPACES ARE PROPOSED FOR THE RESIDENTIAL UNITS.
14 SPACES PROPOSED INCLUDING 1 HANDICAP SPACE.
TOTAL OF 34 SPACES ORIGINALLY PROPOSED

REVISIONS PROPOSED FOR 70-72 EAST CENTRAL STREET PARKING WITH THE SITE PLAN FOR 70, 72, 88 AND 94 EAST CENTRAL STREET
ELIMINATE 4 GARAGE PARKING SPACES
ELIMINATED FORMER SPACE 12 (12R) AND 15 (15R) = 16 GARAGE SPACES AND 14 OUTDOOR SPACES
30 SPACES PROVIDED WHERE 18 SPACES ARE REQUIRED
AS REVISED 70 & 72 EAST CENTRAL STREET PARKING AREA HAS 12 SPACES ABOVE THE ZONING BYLAW PARKING REQUIREMENTS.

RESIDENTIAL DENSITY:
C-1 DISTRICT: 88 AND 94 EAST CENTRAL STREET
COMMERCIAL I REQUIREMENTS (185 ATTACHMENT 7 – 6.1*3)
*3 – NO MORE THAN ONE DWELLING UNIT PER 1,000 SQUARE FEET OF LOT AREA MAY BE PERMITTED.

AREA 88 AND 94 EAST CENTRAL STREET – 54,614± SQ. FT. / 1,000 = 54 UNITS PERMITTABLE
17 UNITS PROPOSED.

NOTE: 88 EAST CENTRAL STREET AND 94 EAST CENTRAL STREET PROPERTIES TO BE COMBINED.

DC DISTRICT: 70 AND 72 EAST CENTRAL STREET
DOWNTOWN COMMERCIAL REQUIREMENTS (185 ATTACHMENT 7 – 6.1*6)
*6 – NO MORE THAN ONE DWELLING UNIT PER 2,000 SQUARE FEET OF LOT AREA MAY BE PERMITTED; ADDITIONAL DWELLING UNITS MAY BE ALLOWED BY SPECIAL PERMIT FROM THE PLANNING BOARD
LOT AREA – 32,810± SQ. FT. / 1,000 = 32 UNITS PERMITTABLE
12 UNITS PROPOSED.

SITE PLAN MODIFICATION
SITE LAYOUT PLAN
70, 72, 88 AND 94 EAST CENTRAL STREET
FRANKLIN, MASSACHUSETTS
PREPARED FOR
70 EAST CENTRAL STREET, LLC
37 EAST CENTRAL STREET
FRANKLIN, MASSACHUSETTS
DECEMBER 24, 2021
SCALE: 1" = 20'

SITE PLAN APPROVAL
REQUIRED
FRANKLIN PLANNING BOARD

DATE

GRAPHIC SCALE
20 0 10 20 40 80
(IN FEET)
1 inch = 20 ft.

NO.	DATE	DESCRIPTION	BY

DATE		INT.
6/19	FIELD BY:	BL
BK#	FIELD BOOK	PG#
12/21	CALCS BY:	RRG
12/21	DESIGNED BY:	RRG
12/21	DRAWN BY:	COMP
12/21	CHECKED BY:	CAQ

UNITED CONSULTANTS INC.
850 FRANKLIN STREET SUITE 11D
WRENTHAM, MASSACHUSETTS 02093
508-384-6560 FAX 508-384-6566

DATE DEC. 24, 2021
SCALE 1" = 20'
PROJECT UC1334
SHEET 3 of 9

LEGEND:

- □ DHSB DRILL HOLE STONE BOUND
- --297-- EXISTING COUNTOUR
- —297— PROPOSED COUNTOUR
- x274.3 SPOT GRADE – PROPOSED
- x274.3EX. SPOT GRADE – EXISTING
- 48M EXIST. TREE – DIAMETER – SPECIES
- UP4–1 UTILITY POLE
- —OHW— OVERHEAD WIRES
- GAS GATE
- WATER CURB STOP
- WATER GATE
- FIRE HYDRANT
- DRAIN MANHOLE
- CATCH BASIN
- SEWER MANHOLE
- D DUMPSTER
- VCC VERTICAL CONCRETE CURBING
- VGC VERTICAL GRANITE CURBING
- HANDICAP PARKING SPACE
- BUILDING MOUNTED LIGHT
- POLE MOUNTED LIGHT

MARCH 13, 2019

PERFORMED BY CARLOS A. QUINTAL, P.E., SOIL EVALUATOR

TP 1 ELEV. = 324.24 – ABANDONED

TP 2 ELEV. = 324.75
0 – 8" A 10YR 3/3 SANDY LOAM
8" – 24" B 10YR 6/6 SANDY LOAM
24" – 60" C 2.5Y 5/6 SNDY LOAM

TP 3 ELEV. = 323.85
0 – 8 A 10YR 3/3 SANDY LOAM
8" – 24" B 10YR 6/6 SANDY LOAM
24" – 64" C 2.5Y 5/6 SANDY LOAM

TP 4 ELEV. = 317.52
0 – 12" A 10YR 3/3 SANDY LOAM
12" – 36" B 10YR 6/6 SANDY LOAM
36" – 90" C 2.5Y 4/3 GRAVELLY SANDY LOAM
NO GROUNDWATER
NO MOTLES AT 90" ELEV. = 310.02

TP 5 ELEV. = 318.53
0 – 18" A 10YR 3/3 SANDY LOAM
18" – 42" B 10YR 6/6 SANDY LOAM
42" – 109" C 2.5Y 5/6 SANDY LOAM
GROUNDWATER AT 100" ELEV. = 310.20
NO MOTTLES OBSERVED

TP 6 ELEV. = 318.03
0 – 10" A 10YR 3/3 SANDY LOAM
10" – 42" B 10YR 6/6 SANDY LOAM
42" – 97" 2.5Y 5/6 SANDY LOAM
NO GROUNDWATER OBSERVED
NO MOTTLES OBSERVED AT 97" ELEV. = 309.94

ALL TEST PITS WERE DUG TO REFUSAL

SIGHT DISTANCE BASED ON POSTED SPEED OF 25 MPH AT THE INTERSECTION OF EAST CENTRAL STREET AND ALPINE PLACE.
PER MASDOT STOPPING SIGHT DISTANCE FOR 25 MPH AT 0% GRADE – 155 FEET.
SIGHT DISTANCE WAS MEASURED 14.5 FEET FROM EDGE LINE.
EXITING THE SITE:
LOOKING WEST 200 + FEET.
LOOKING EAST 300 + FEET.

REFERENCE MASS HIGHWAY EXHIBIT 3.8
200 FOOT SIGHT DISTANCE AT ZERO GRADE HAD A DESIGN SPEED OF 30 MPH.

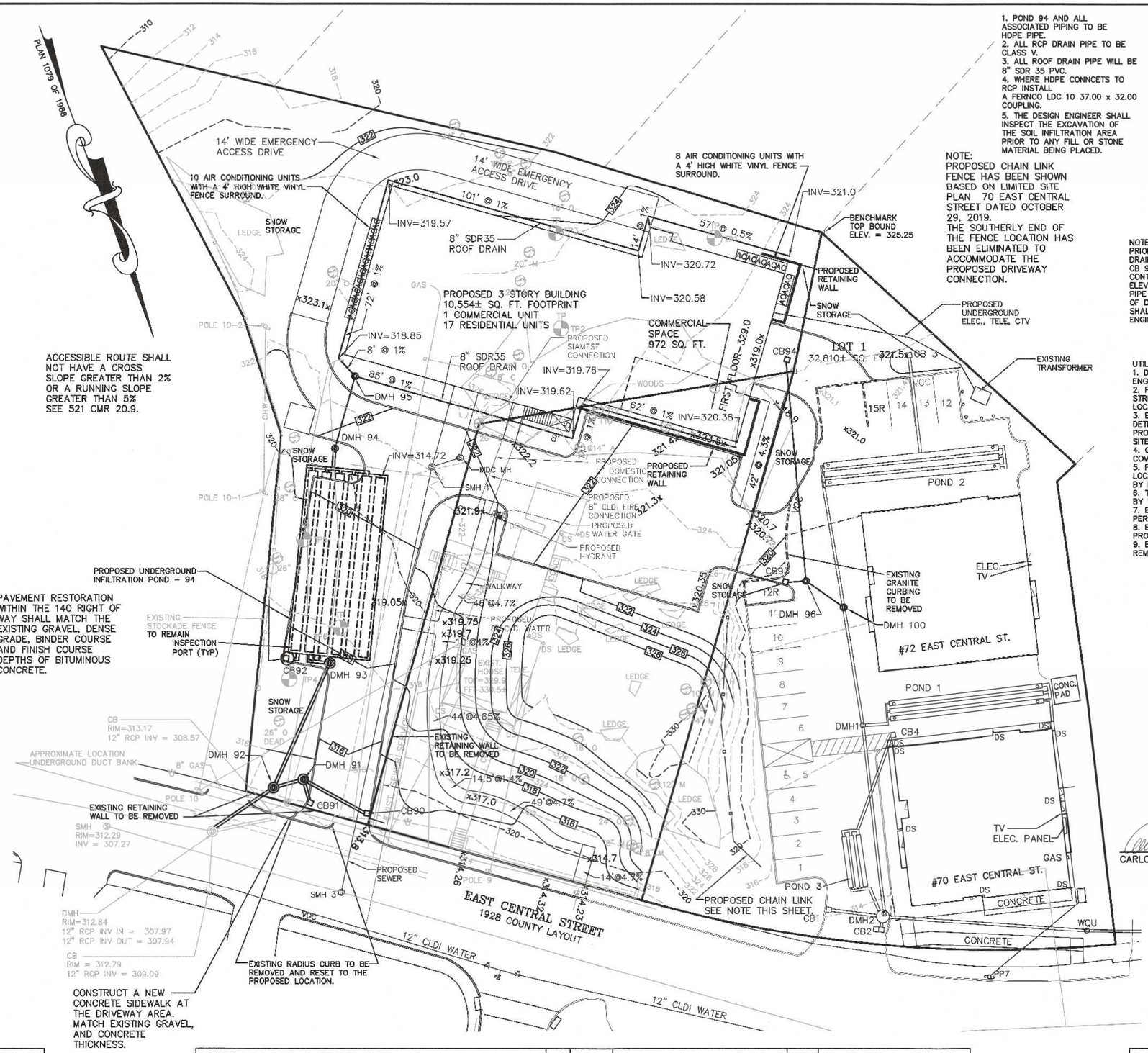

1. POND 94 AND ALL ASSOCIATED PIPING TO BE HDPE PIPE.
2. ALL RCP DRAIN PIPE TO BE CLASS V.
3. ALL ROOF DRAIN PIPE WILL BE 8" SDR 35 PVC.
4. WHERE HDPE CONNCETS TO RCP INSTALL A FERNCO LDC 10 37.00 x 32.00 COUPLING.
5. THE DESIGN ENGINEER SHALL INSPECT THE EXCAVATION OF THE SOIL INFILTRATION AREA PRIOR TO ANY FILL OR STONE MATERIAL BEING PLACED.

NOTE:
PROPOSED CHAIN LINK FENCE HAS BEEN SHOWN BASED ON LIMITED SITE PLAN 70 EAST CENTRAL STREET DATED OCTOBER 29, 2019.
THE SOUTHERLY END OF THE FENCE LOCATION HAS BEEN ELIMINATED TO ACCOMMODATE THE PROPOSED DRIVEWAY CONNECTION.

PROPOSED DRAINAGE STRUCTURE SCHEDULE:

CB 90
RIM = 314.2
INV OUT = 310.42 12" RCP

CB 91
RIM = 314.1
INV OUT = 309.74 12" RCP

CB 92 STORMCEPTOR 450I
RIM = 317.58
INV OUT = 314.65 12" HDPE

CB 93 STORMCEPTOR 450I
RIM = 319.25
INV OUT = 315.54 12" RCP

CB 94 STORMCEPTOR 450I
RIM = 318.8
INV OUT = 315.87 12" RCP

DMH 91 – STORMCEPTOR 450
RIM = 315.0
INV IN = 310.18 12" RCP – CB 90
INV IN = 309.68 12" RCP – CB 91
INV OUT = 309.58 12" RCP

DMH 92
RIM 314.5
INV IN = 309.5 12" RCP – DMH 91
INV IN = 310.5 12" RCP – DMH 93
INV OUT = 308.5 12" RCP

DMH 93
RIM=317.9
INV IN =315.0 12" HDPE
INV OUT = 312.46 12" RCP

DMH 94
RIM = 322.3
INV IN = 314.92 12" RCP
INV OUT = 314.82 12" HDPE

DMH 95
RIM = 323.5
INV IN = 318.77 8" SDR 35
INV OUT = 315.92 12" RCP

DMH 96
RIM = 319.2
INV IN = 315.46 12" RCP
INV OUT = 315.36 12" RCP

DMH 100 – DOGHOUSE MANHOLE
RIM = 319.0
INV IN = 315.22 12" RCP
INV OUT = 315.12 12" RCP

NOTE:
PRIOR TO COMMENCING WITH THE DRAINAGE STRUCTURE OR PIPING FOR CB 93, CB 94 DMH 96, THE CONTRACTOR SHALL CONFIRM ELEVATION OF THE EXISTING DRAIN PIPE AT THE PROPOSED CONNECTION OF DMH 100. ANY DISCREPANCIES SHALL BE REPORTED TO THE DESIGN ENGINEER.

UTILITY NOTES:
1. DOMESTIC WATER SUPPLY SHALL BE BASED ON PLUMBING ENGINEERS CALCULATIONS.
2. FIRE SUPPLY LINE TO BE CONNECTED TO EXISTING WATER MAIN IN STREET. LOCATION SHOWN APPROXIMATELY. FINAL SIZING AND LOCATION SHALL BE DETERMINED BY THE PLUMBING ENGINEER.
3. ELECTRIC, TELEPHONE AND CABLE TV LOCATIONS TO BE DETERMINED BY THE APPROPRIATE UTILITY COMPANIES. SERVCIES ARE PROPOSED TO BE CONNECTED TO THE 70–72 EAST CENTRAL STREET SITE AND SHALL BE UNDERGROUND.
4. GAS SERVICE AND LOCATIONS TO BE DETERMINED BY THE GAS COMPANY.
5. PIV AND SIAMESE CONNECTIONS SHOWN APPROXIMATE. FINAL LOCATIONS TO BE DESIGNED BY PLUMING ENGINEER AND APPROVED BY FIRE DEPARTMENT.
6. THE DRAINAGE INSTALLATION SHALL BE INSPECTED AND CERTIFIED BY THE DESIGN ENGINEER PRIOR TO BACKFILLING.
7. EXISTING WATER SERVICE TO BE CUT AND CAPPED AT THE MAIN PER DPW REQUIREMENTS.
8. EXISTING SEWER SERVICE TO BE CUT AND CAPPED AT THE PROPERTY LINE.
9. EXISTING ELECTRIC, TELEPHONE AND CTV SERVICES TO BE REMOVED BY THE APPROPRIATE UTILITY COMPANIES.

NOTES:
1. CONTRACTOR TO CONTACT DIGSAFE PRIOR TO COMMENCEMENT OF CONSTRUCTION.
2. CONTRACTOR TO VERIFY LOCATIONS OF EXISTING UTILITIES ANY REPORT ANY DISCREPANCIES TO UNITED CONSULTANTS, INC.
3. ALL WORK SHALL CONFORM TO THE TOWN OF FRANKLIN DPW STANDARDS.
4. MAINTAIN A MINIMUM OF 10' SEPARATION FROM THE WATER SERVICE TO THE SEWER SERVICE.

MAP 286 PARCELS 32 AND 34 ARE TO BE COMBINED.
MAP 286 PARCEL 33 HAS A PROPOSED EASEMENT FOR ACCESS AND UTILITIES.

COMMONWEALTH OF MASSACHUSETTS
CARLOS A. QUINTAL
CIVIL
No. 30812
REGISTERED PROFESSIONAL ENGINEER

CARLOS A. QUINTAL P.E. #30812

OWNER:
MAP 286 PARCELS 32 AND 34
70 EAST CENTRAL STREET, LLC
37 EAST CENTRAL STREET
FRANKLIN, MASSACHUSETTS

OWNER MAP 286 PARCEL 33
JOHN AND CARMEL SHERRY
88 EAST CENTRAL STREET

APPLICANT:
70 EAST CENTRAL STREET, LLC
37 EAST CENTRAL STREET
FRANKLIN, MASSACHUSETTS

SITE PLAN MODIFICATION
GRADING & UTILITY PLAN
70, 72, 88 AND 94 EAST CENTRAL STREET
FRANKLIN, MASSACHUSETTS
PREPARED FOR
70 EAST CENTRAL STREET, LLC
37 EAST CENTRAL STREET
FRANKLIN, MASSACHUSETTS
DECEMBER 24, 2021
SCALE: 1" = 20'

SITE PLAN APPROVAL
REQUIRED
FRANKLIN PLANNING BOARD

DATE

GRAPHIC SCALE
(IN FEET)
1 inch = 20 ft.

NO.	DATE	DESCRIPTION	BY

DATE		INT.
6/19	FIELD BY:	BL
BK#	FIELD BOOK	PG# 63
12/21	CALCS BY:	RRG
12/21	DESIGNED BY:	RRG
12/21	DRAWN BY:	COMP
12/21	CHECKED BY:	CAQ

UNITED CONSULTANTS INC.
850 FRANKLIN STREET SUITE 11D
WRENTHAM, MASSACHUSETTS 02093
508-384-6580 FAX 508-384-6586

DATE	DEC. 24, 2021
SCALE	1" = 20'
PROJECT	UC1334
SHEET	4 of 9

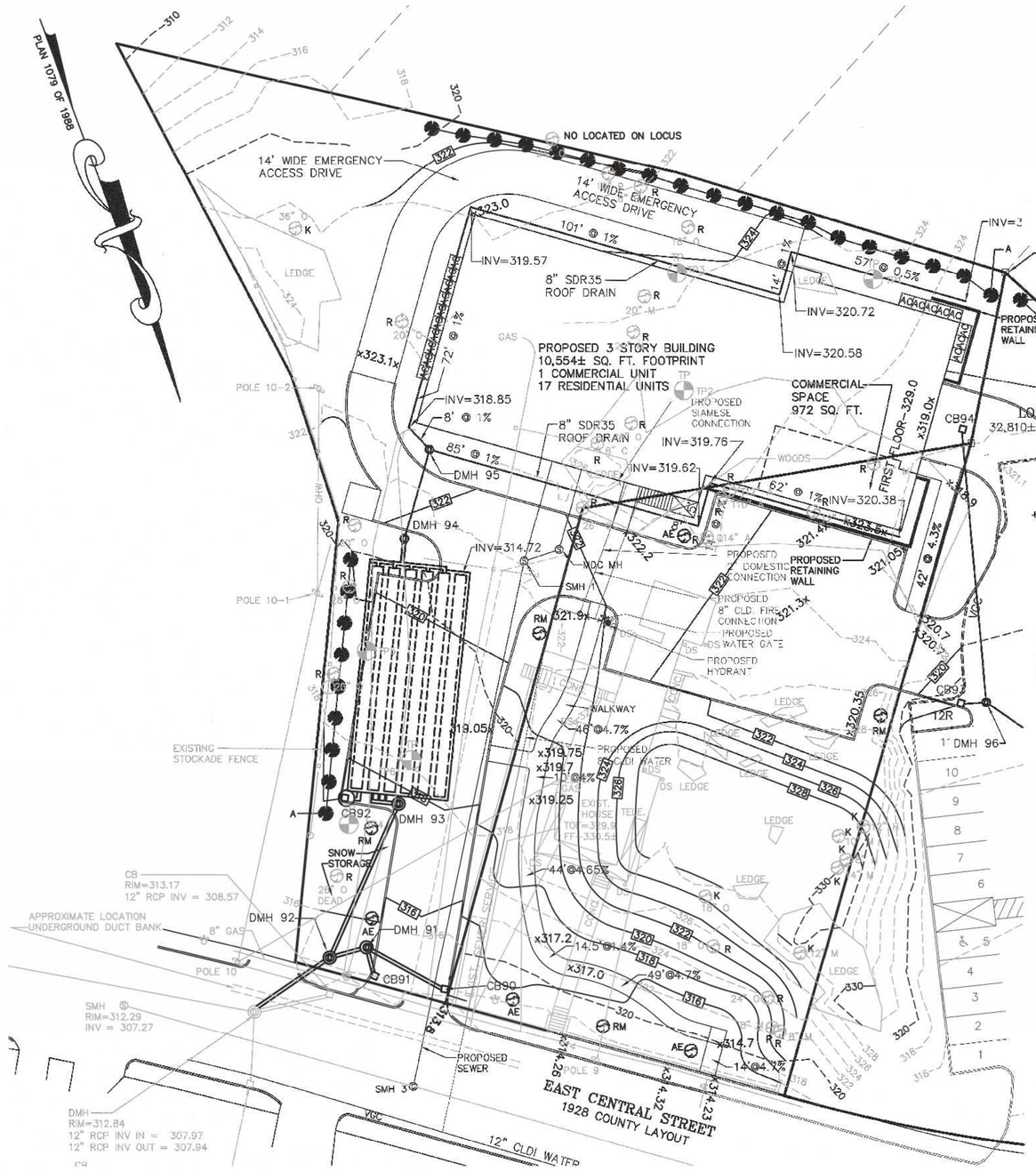

GENERAL NOTES

1. PLANTING HOLE SHALL BE THREE TIMES ROOT BALL DIAMETER.
2. ALL INSTALLED PLANT MATERIAL SHALL BEAR THE SAME RELATIONSHIP TO FINISH GRADE (TOP OF PLANTING SOIL MIX), AS IT BORE TO THE NURSERY OR FIELD GRADE.
3. THE PLANTING HOLE DEPTH SHALL PROVIDE FOR A SIX INCH DEPTH OF PLANTING SOIL MIX BELOW THE ANTICIPATED ROOT BALL BOTTOM.
4. NOTWITHSTANDING THE REQUIREMENTS OF NOTES 1 & 3 ABOVE, NO PLANTING HOLE FOR TREES SHALL HAVE LESS THAN ONE CUBIC YARD OF PLANTING SOIL MIX.
5. PLANTING SOIL MIX SHALL BE A LOAM OR SANDY LOAM, AS DEFINED BY THE U.S.D.A. THE FIRST (BOTTOM) SIX INCH LAYER IN THE PRE-EXCAVATED PLANTING HOLE SHALL BE FIRMLY TAMPED TO PREVENT SETTLEMENT OF THE ROOT BALL POSITIONED THEREON. SUBSEQUENT LIFTS TO FINISH GRADE SHALL BE IN SIX INCH LOOSE LIFTS, EACH SETTLED BY THOROUGH SOAKING.
6. UPON ATTAINMENT OF FINISH GRADE WITHIN EACH PLANTING BED, THE GROUND SURFACE SHALL RECEIVE AN EVEN APPLICATION OF ORGANIC NON-PHOSPHORUS FERTILIZER APPLIED PER THE MANUFACTURERS RECOMENDATIONS.
7. COVERED WITH A THREE INCH NOMINAL DEPTH OF SHREDDED CEDAR BARK (OR APPROVED EQUIVALENT), MAINTAINING A ONE INCH MINIMUM DEPTH AT THE BERM EDGE, AND IMMEDIATELY RISING TO A THREE INCH DEPTH ACROSS THE PLANTING BED OR LANDSCAPE ISLAND. (SEE DETAIL)

PLANTING SCHEDULE

NUMBER	COMMON NAME	SCIENTIFIC NAME	SIZE	CONDITION
4	AMERICAN ELM – AE	ULMUS AMERICANA	3"	B&B
4	RED MAPLE – RM	ACER RUBRUM	3"	B&B
28	ARBORVITAE – A	THUJA PLICATA	4 – 6 FEET	B&B

EXISTING TREE LEGEND:

R – TO BE REMOVED

K – TO REMAIN

PLANTINGS FOR 88 AND 94 EAST CENTRAL STREET AREAS
– PER SECTION 185-21C(5) PROVIDE 1 TREE PER 10 PARKING SPACES.
– 42 PARKING SPACES LOCATED OUTSIDE OF BUIDLING AND INSIDE OF BUILDING = 42 / 10 – 5 TREES
8 TREES PROVIDED.
– ALL PLANTINGS ARE IN ACCORDANCE WITH THE TOWN OF FRANKLIN BEST DEVELOPMENT PRACTICES GUIDEBOOK.

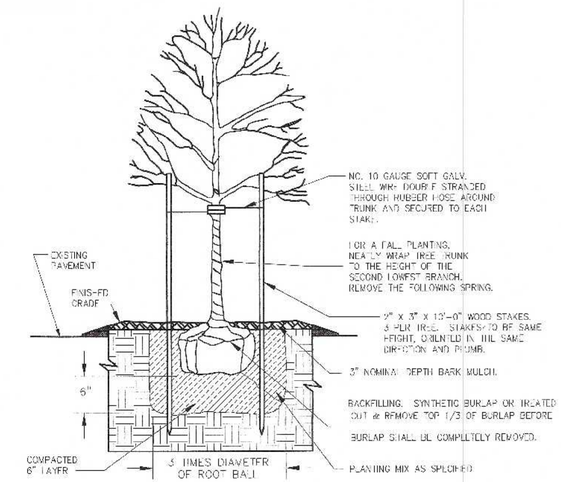

DECIDUOUS TREE PLANTING

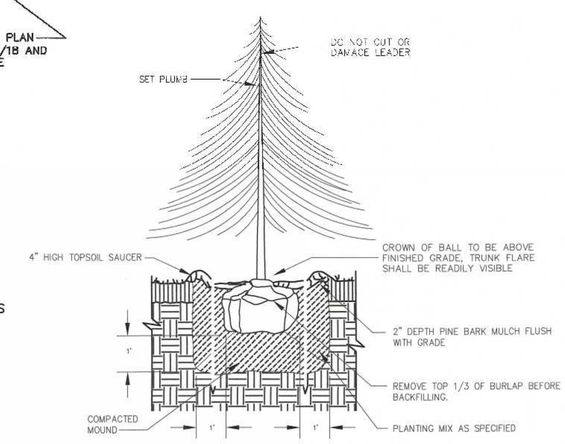

EVERGREEN TREE PLANTING

NTS

LEGEND:

- DHSB DRILL HOLE STONE BOUND
- 297 EXISTING COUNTOUR
- 297 PROPOSED COUNTOUR
- x274.3 SPOT GRADE – PROPOSED
- x274.3EX. SPOT GRADE – EXISTING
- 48M EXIST. TREE – DIAMETER – SPECIES
- UP4-1 UTILITY POLE
- OHW OVERHEAD WIRES
- GAS GAS GATE
- WSV WATER CURB STOP
- WSV WATER GATE
- FIRE HYDRANT
- DRAIN MANHOLE
- CATCH BASIN
- SEWER MANHOLE
- D DUMPSTER
- VCC VERTICAL CONCRETE CURBING
- VGC VERTICAL GRANITE CURBING
- HANDICAP PARKING SPACE
- BUILDING MOUNTED LIGHT
- POLE MOUNTED LIGHT

MAP 286 PARCELS 32 AND 34 ARE TO BE COMBINED.
MAP 286 PARCEL 33 HAS A PROPOSED EASEMENT FOR ACCESS AND UTILITIES.

COMMONWEALTH OF MASSACHUSETTS CARLOS A. QUINTAL No. 30812 REGISTERED PROFESSIONAL ENGINEER

CARLOS A. QUINTAL P.E. #30812

OWNER:
MAP 286 PARCELS 32 AND 34
70 EAST CENTRAL STREET, LLC
37 EAST CENTRAL STREET
FRANKLIN, MASSACHUSETTS

OWNER MAP 286 PARCEL 33
JOHN AND CARMEL SHERRY
88 EAST CENTRAL STREET

APPLICANT:
70 EAST CENTRAL STREET, LLC
37 EAST CENTRAL STREET
FRANKLIN, MASSACHUSETTS

SITE PLAN MODIFICATION
PLANTING PLAN
70, 72, 88 AND 94 EAST CENTRAL STREET
FRANKLIN, MASSACHUSETTS
PREPARED FOR
70 EAST CENTRAL STREET, LLC
37 EAST CENTRAL STREET
FRANKLIN, MASSACHUSETTS
DECEMBER 24, 2021
SCALE: 1" = 20'

SITE PLAN APPROVAL REQUIRED
FRANKLIN PLANNING BOARD

DATE

GRAPHIC SCALE
20 0 10 20 40 80
(IN FEET)
1 inch = 20 ft.

NO.	DATE	DESCRIPTION	BY

DATE		INT.
6/19	FIELD BY:	BL
BK#	FIELD BOOK	PG#
12/21	CALCS BY:	RRG
12/21	DESIGNED BY:	RRG
12/21	DRAWN BY:	COMP
12/21	CHECKED BY:	CAQ

UNITED CONSULTANTS INC.
850 FRANKLIN STREET SUITE 11D
WRENTHAM, MASSACHUSETTS 02093
508-384-6560 FAX 508-384-6566

DATE DEC. 24, 2021
SCALE 1" = 20'
PROJECT UC1334
SHEET 5 of 9

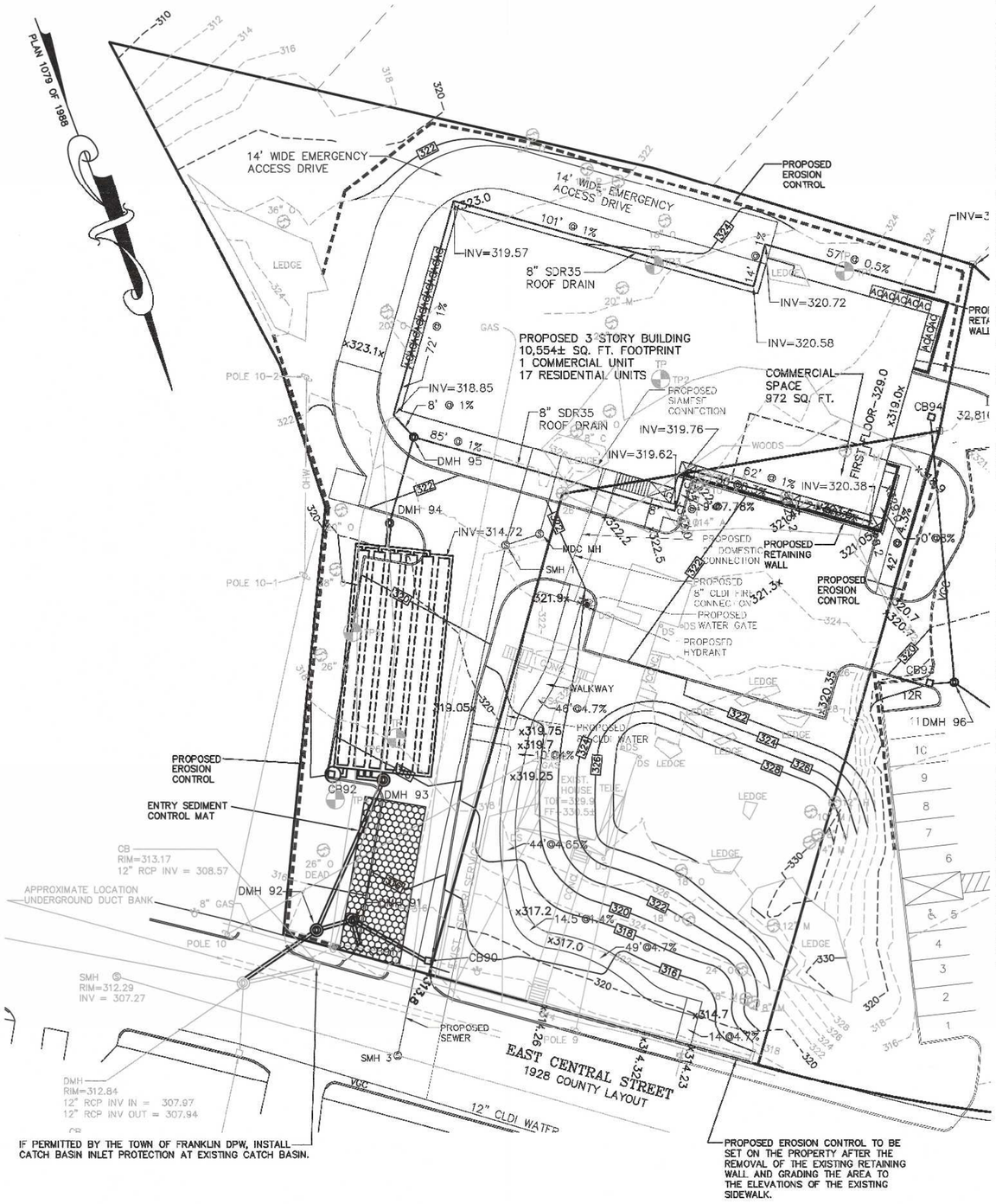

OPERATION AND MAINTENANCE PLAN

CONSTRUCTION PHASE

1. THE OWNERS REPRESENTATIVE, BRAD CHAFFEE (1-508-331-6161), SHALL BE THE RESPONSIBLE PARTY FOR THE STORMWATER MAINTENANCE PLAN.
2. THE SITE CONTRACTOR SHALL INSPECT ALL EROSION CONTROL MEASURES WEEKLY AND AFTER ALL RAIN EVENTS.
3. SEDIMENT SHALL BE REMOVED FROM COMPOST SOCK WHEN A MAXIMUM DEPTH OF 6" IS OBSERVED OR AS NEEDED.
4. CONSTRUCTION ENTRY MAT SHALL BE INSPECTED WEEKLY AND AFTER ALL RAIN EVENTS. SEE DETAIL FOR MAINTENANCE REQUIREMENTS.
5. DAMAGED OR DETERIORATED COMPOST SOCK AREAS SHALL BE REPLACED IMMEDIATELY.
6. EROSION CONTROL MEASURES SHALL REMAIN IN PLACE UNTIL CONSTRUCTION IS COMPLETED AND ALL DISTURBED AREAS ARE STABILIZED.
7. SILT SAKS SHALL BE INSTALLED AT ALL CATCH BASINS AND SHALL BE INSPECTED WEEKLY AND AFTER ALL RAIN EVENTS.
8. CLEANING OF SILT SAKS SHALL BE COMPLETED AS NECESSARY.
9. THE STORMCEPTOR UNITS SHALL BE CLEANED WITH A VACUUM TRUCK.

INSPECTION AND MAINTENANCE SCHEDULE:

1. INSPECTIONS SHALL BE CONDUCTED BY THE APPLICANTS ENGINEER, CONTRACTOR AND / OR REPRESENTATIVES OF THE TOWN AS NECESSARY. AT A MINIMUM INSPECTIONS SHALL BE CONDUCTED ON A MONTHLY BASIS.
2. MONTHLY INSPECTIONS SHALL INCLUDE THE PARKING LOT SURFACE TO DETERMINE IF ACCUMULATED SEDIMENT ARE TO BE REMOVED.
3. INSPECTIONS OF THE STORMCEPTOR UNITS TO DETERMINE DEPTH OF SEDIMENT AND REQUIRED CLEANING.
4. INSPECTION OF THE EXISTING CATCH BASINS TO DETERMINE THE DEPTH OF SEDIMENT AND REQUIRED CLEANING.
5. INSPECTION OF POND 94, THE EXISTING PONDS TO DETERMINE IF CLEANING IS NECESSARY.
   OPERATION AND MAINTENANCE SCHEDULE

CONSTRUCTION PHASE:

1. THE EROSION CONTROL BARRIERS SHALL BE INSPECTED ON A WEEKLY BASIS AND AFTER ALL STORM EVENTS.
2. ONCE THE PARKING LOT HAS BEEN PAVED DAILY INSPECTIONS SHALL BE CONDUCTED TO DETERMINE THE NECESSITY TO REMOVE ANY ACCUMULATED SEDIMENT. THE REMOVAL OF THE ACCUMULATED SEDIMENT SHALL BE COMPLETED ON THE DAY THE DETERMINATION IS MADE.
3. SILT SAKS SHALL BE INSTALLED AT THE STORMCEPTOR UNITS, CATCH BASIN 91 AND CB97AND THE TWO CATCH BASINS ON 70 – 72 EAST CENTRAL STREET SITE. ONCE INSTALLED THEY SHALL BE INSPECTED ON A WEEKLY BASIS AND CLEANED AS NECESSARY.
4. THE STORMCEPTOR UNITS SHALL BE INSPECTED ON A WEEKLY BASIS AND CLEANED WHEN THE SEDIMENT DEPTH REACHES 8"
5. THE POND SHALL BE INSPECTED AFTER EACH STORM EVENT AND CLEANED WHEN 2" OF SEDIMENT HAS ACCUMULATED AT THE INLET. ANY TRASH OR CONSTRUCTION DEBRIS SHALL BE IMMEDIATELY REMOVED. ADDITIONAL EROSION CONTROLS MAY BE REQUIRED DEPENDING ON ACTUAL FIELD CONDITIONS DURING CONSTRUCTION.

LONG TERM:

1. THE PARKING LOT SHALL BE SWEPT TWICE PER YEAR WITH ONE BEING AFTER THE LAST WINTER SANDING.
2. THE STORMCEPTORS SHALL BE INSPECTED 4 TIMES PER YEAR AND SEDIMENT REMOVED WHEN THE DEPTH REACHES 8 INCHES
3. THE PONDS SHALL BE INSPECTED AND PREVENTIVE MAINTENANCE PERFORMED TWICE PER YEAR. THE PONDS SHALL BE INSPECTED AFTER EVERY STORM EVENT EXCEEDING 1 INCH OF RAINFALL FOR THE FIRST 3 MONTHS AND THEN TWICE PER YEAR THEREAFTER AND WHEN THERE ARE DISCHARGES THROUGH THE HIGH OUTLET.
4. DURING INSPECTIONS OF STORM-WATER FACILITIES ANY TRASH OR DEBRIS DISCOVERED SHALL BE IMMEDIATELY REMOVED.

NOTES:
1. ANY AREA NOT BEING ACTIVELY WORKED FOR 14 DAYS SHALL BE TEMPORARILY STABILIZED.
2. UPON COMPLETION OF GRADING ACTIVITIES THE AREA SHALL BE STABILIZED OR PLANTED WITHIN 7 DAYS.
3. NON-PHOSPHORUS FERTILIZER SHALL BE APPLIED AS NECESSARY.
4. NON-HALOGENATED ICE MELT SHALL BE APPLIED AS NECESSARY.

PROJECT NARRATIVE:
THE PROJECT CONSISTS OF THE DEMOLITION OF AN EXISTING BUILDING AND IMPROVEMENTS. UPON RECEIPT OF ALL NECESSARY APPROVALS THE APPLICANT WILL FILE FOR AND OBTAIN THE NECESSARY ADDITIONAL PERMITS INCLUDING SEWER AND WATER CONNECTION PERMITS, STREET OPENING PERMITS AND BUILDING PERMIT. UPON SECURING ALL THE NECESSARY PERMITS THE PROJECT WILL MOVE TO THE CONSTRUCTION PHASE AND WILL BE COMPLETED BASED ON THE CONSTRUCTION SEQUENCE.

COMMONWEALTH OF MASSACHUSETTS
CARLOS A. QUINTAL
CIVIL
No. 30812
REGISTERED PROFESSIONAL ENGINEER

CARLOS A. QUINTAL P.E. #30812

EROSION CONTROL NOTES:

1. COMPOST SOCK SHALL BE INSTALLED PRIOR TO TREE CLEARING OR SITE WORK COMMENCING.
2. ENTRY MAT TO BE INSTALLED.
3. COMPOST SOCK TO REMAIN IN CONTACT WITH THE EARTH. REPAIR OR RESET AS NECESSARY.
4. SLOPES GREATER THAN 3' HORIZONTAL TO 1' VERTICAL SHALL BE STABILIZED WITH HYDROSEED, SECURED GEOTEXTILE FABRIC OR RIPRAP AS REQUIRED TO PREVENT EROSION. ALL SLOPE FLATTER THAN 3' HORIZONTAL TO 1' VERTICAL SHALL BE HYDROSEEDED.
5. STORMCEPTOR UNITS, CATCH BASINS AND PARKING AREA TO BE CLEANED ONCE CONSTRUCTION IS COMPLETED.
6. ALL SEDIMENT COLLECTED DURING THE CONSTRUCTION PHASE OR POST CONSTRUCTION PHASE SHALL BE DISPOSED OF TO AN APPROVED LOCATION.
7. AFTER ALL DISTURBED AREAS HAVE BEEN STABILIZED THE EROSION CONTROL MEASURES SHALL BE REMOVED.
8. DAMAGED OR DETERIORATED EROSION CONTROL MEASURES SHALL BE REPAIRED OR REPLACED IMMEDIATELY AFTER THEY HAVE BEEN IDENTIFIED.
9. THE CONTRACTOR SHALL BE RESPONSIBLE FOR ALL INSPECTIONS.
10. DUST CONTROL WILL BE BY SPRAYING WATER AS NECESSARY. THE USE OF OILS, PETROLEUM PRODUCTS OR TOXIC LIQUIDS FOR DUST CONTROL IS PROHIBITED.

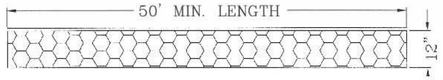

ENTRY SEDIMENTATION CONTROL MAT SECTION
N.T.S.

NOTES:
1. PAD SHALL BE A MINIMUM OF 20 FEET IN WIDTH. EXISTING ASPHALT DRIVE TO REMAIN IN PLACE UNTIL FINAL PAVEMENT IS TO BE INSTALLED.
2. PAD SHALL CONSIST OF 4" STONE 8" MIN. DEPTH AND THEN TOP DRESSED WITH 4" OF 1" – 2" WASHED STONE.

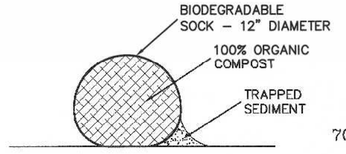

COMPOST SOCK DETAIL

OWNER:
MAP 286 PARCELS 32 AND 34
70 EAST CENTRAL STREET, LLC
37 EAST CENTRAL STREET
FRANKLIN, MASSACHUSETTS

OWNER MAP 286 PARCEL 33
JOHN AND CARMEL SHERRY
88 EAST CENTRAL STREET

APPLICANT:
70 EAST CENTRAL STREET, LLC
37 EAST CENTRAL STREET
FRANKLIN, MASSACHUSETTS

SITE PLAN MODIFICATION
EROSION CONTROL PLAN
70, 72, 88 AND 94 EAST CENTRAL STREET
FRANKLIN, MASSACHUSETTS
PREPARED FOR
70 EAST CENTRAL STREET, LLC
37 EAST CENTRAL STREET
FRANKLIN, MASSACHUSETTS
DECEMBER 24, 2021
SCALE: 1" = 20'

SITE PLAN APPROVAL
REQUIRED
FRANKLIN PLANNING BOARD

DATE

GRAPHIC SCALE
20 0 10 20 40 80
(IN FEET)
1 inch = 20 ft.

NO.	DATE	DESCRIPTION	BY

DATE		INT.
6/19	FIELD BY:	BL
BK#	FIELD BOOK	PG#
12/21	CALCS BY:	RRG
12/21	DESIGNED BY:	RRG
12/21	DRAWN BY:	COMP
12/21	CHECKED BY:	CAQ

UNITED CONSULTANTS INC.
850 FRANKLIN STREET SUITE 11D
WRENTHAM, MASSACHUSETTS 02093
508-384-6560 FAX 508-384-6566

DATE: DEC. 24, 2021
SCALE: 1" = 20'
PROJECT: UC1334
SHEET: 6 of 9

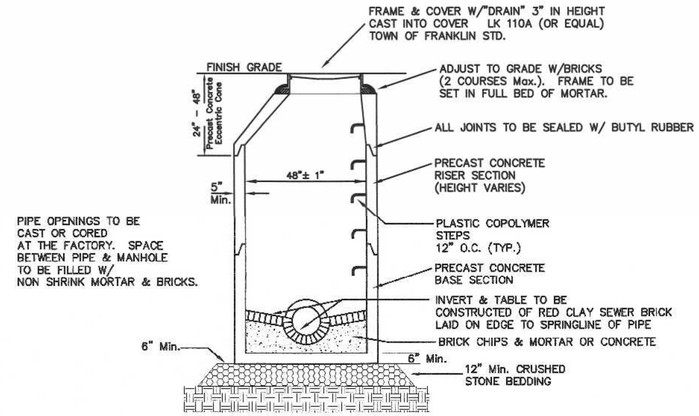

PRECAST DRAIN MANHOLE

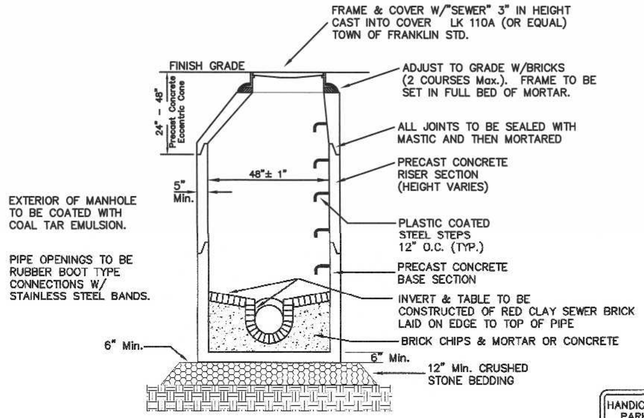

PRECAST SEWER MANHOLE

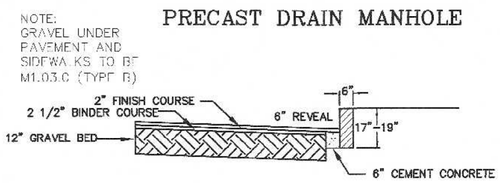

PAVEMENT AND VA-4 VERTICAL GRANITE CURBING

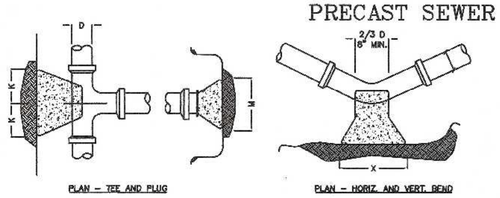

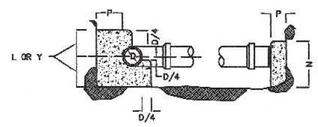

SIZE OF BRANCH	J	K	L	M	N	O
4" TO 8"	10"	10"	1'-0"	2'-0"	1'-6"	10"
10" TO 16"	1'-0"	1'-6"	1'-8"	3'-10"	2'-10"	1'-6"
24"	1'-4"	2'-0"	2'-6"	5'-0"	3'-6"	1'-8"

TEES AND PLUGS

	90 & 45 BENDS			22 1/2 & 11 1/4		
D	4" TO 8"	10" TO 16"	24"	4"TO 8"	10" TO 16"	24"
X	1'-8"	3'-4"	3'-8"	1'-4"	2'-0"	3'-8"
Y	1'-2"	1'-8"	2'-4"	1'-0"	1'-2"	2'-4"

BENDS

THRUST BLOCK DETAILS

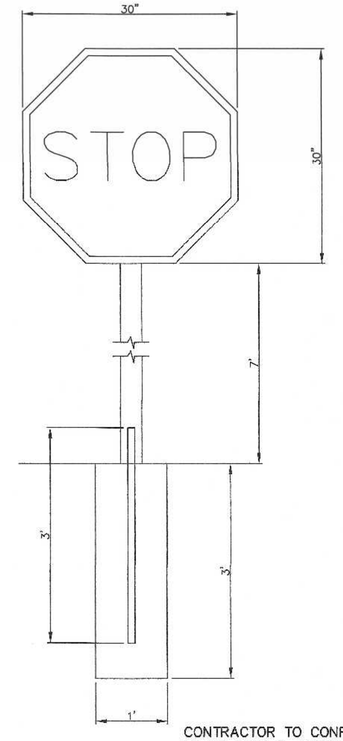

STOP SIGN DETAIL
N.T.S

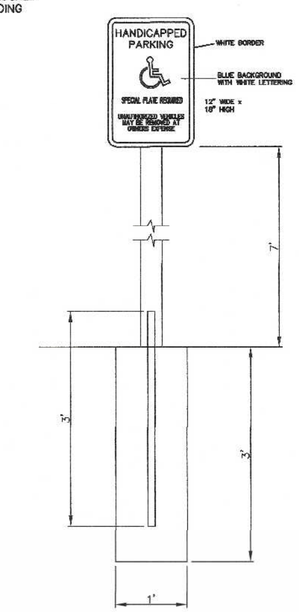

HANDICAP SIGN DETAIL
N.T.S

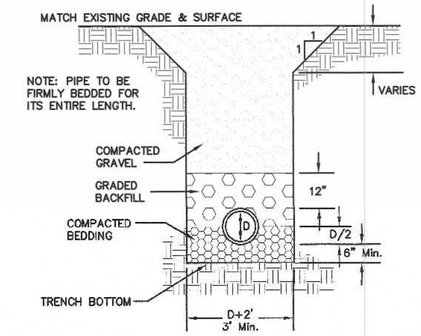

TYPE OF PIPE	RCP DRAIN	CLDI WATER	PVC SEWER	D.I. SEWER
BEDDING MATERIAL	PROC. GRAVEL	SAND	3/4" STONE	3/8" STONE
BACKFILL MATERIAL	ORD. FILL	SAND	3/4" STONE	3/8" STONE

UTILITY TRENCH DETAIL

CONTRACTOR TO CONFIRM EXISITNG ELEVATIONS AT CONNECTION POINT AND NOTIFY THE DESIGN ENGINEER.

SEWER PIPE TO BE 8" SDR 35. SEWER PIPE SIZE AND TYPE WITININ 10 FEET OF THE BUILDING SHALL BE PROVIDED BY THE PLUMBING ENGINEER.

SEWER PIPE TO MDC SHALL BE 4" CAST IRON INTO AND OUT OF MDC MANHOLE. REFER TO DETAIL FOR CONNECTION TO PVC.

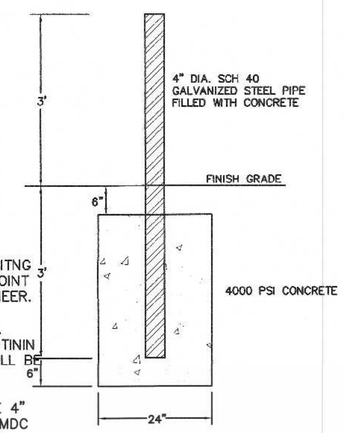

BOLLARD DETAIL

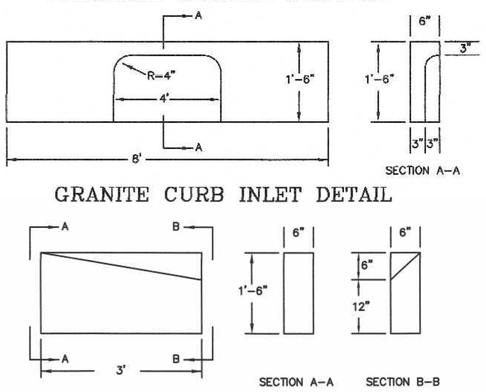

GRANITE CURB INLET DETAIL

GRANITE CURB TRANSITION DETAIL

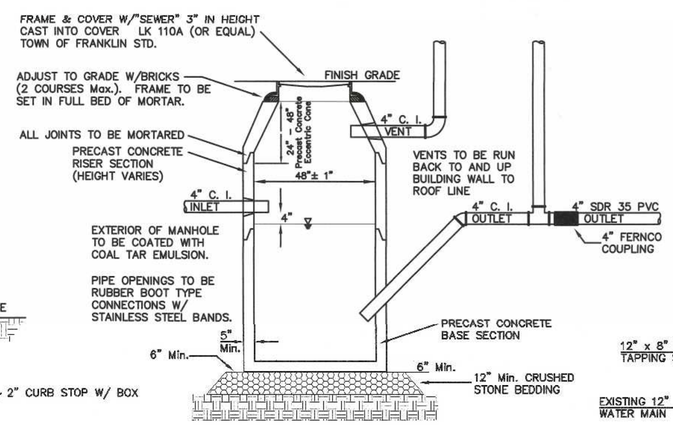

M.D.C. STYLE TRAP

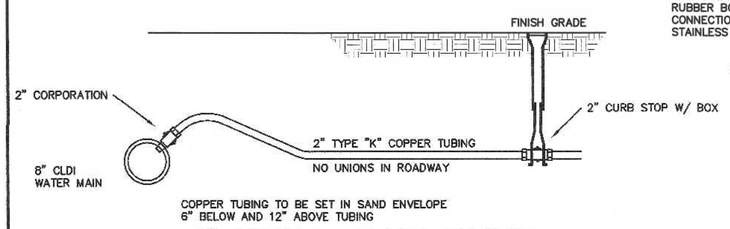

2" DOMESTIC WATER SERVICE

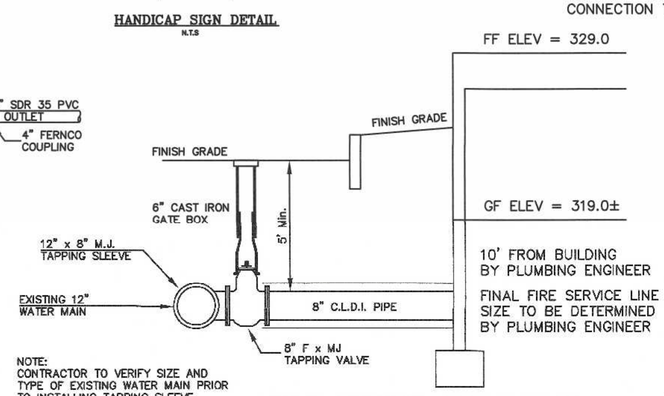

NOTE:
CONTRACTOR TO VERIFY SIZE AND TYPE OF EXISTING WATER MAIN PRIOR TO INSTALLING TAPPING SLEEVE.

FIRE SERVICE CONNECTION

NOTES:
1. CONTRACTOR TO CONTACT DIGSAFE PRIOR TO COMMENCEMENT OF CONSTRUCTION.
2. CONTRACTOR TO VERIFY LOCATIONS OF EXISTING UTILITIES ANY REPORT ANY DISCREPANCIES TO UNITED CONSULTANTS, INC.
3. ALL WORK SHALL CONFORM TO THE TOWN OF FRANKLIN DPW STANDARDS.
4. MAINTAIN A MINIMUM OF 10' SEPARATION FROM THE WATER SERVICE TO THE SEWER SERVICE.

OWNER:
MAP 286 PARCELS 32 AND 34
70 EAST CENTRAL STREET, LLC
37 EAST CENTRAL STREET
FRANKLIN, MASSACHUSETTS

OWNER MAP 286 PARCEL 33
JOHN AND CARMEL SHERRY
88 EAST CENTRAL STREET

APPLICANT:
70 EAST CENTRAL STREET, LLC
37 EAST CENTRAL STREET
FRANKLIN, MASSACHUSETTS

COMMONWEALTH OF MASSACHUSETTS
CARLOS A. QUINTA
CIVIL
No. 30812
PROFESSIONAL ENGINEER

CARLOS A. QUINTA P.E. #30812

SITE PLAN MODIFICATION
CONSTRUCTION DETAIL PLAN - 1
70, 72, 88 AND 94 EAST CENTRAL STREET
FRANKLIN, MASSACHUSETTS
PREPARED FOR
70 EAST CENTRAL STREET, LLC
37 EAST CENTRAL STREET
FRANKLIN, MASSACHUSETTS
DECEMBER 24, 2021
SCALE: 1" = 20'

SITE PLAN APPROVAL
REQUIRED
FRANKLIN PLANNING BOARD

DATE

GRAPHIC SCALE
20 0 10 20 40 80
(IN FEET)
1 inch = 20 ft.

NO.	DATE	DESCRIPTION	BY

DATE		INT.
6/19	FIELD BY:	BL
BK# 74	FIELD BOOK	PG# 63
12/21	CALCS BY:	RRG
12/21	DESIGNED BY:	RRG
12/21	DRAWN BY:	COMP
12/21	CHECKED BY:	CAQ

UNITED CONSULTANTS INC.
850 FRANKLIN STREET SUITE 11D
WRENTHAM, MASSACHUSETTS 02093
508-384-6560 FAX 508-384-6566

DATE DEC. 24, 2021
SCALE 1" = 20'
PROJECT UC1334
SHEET 7 of 9

CSR	Hydro Conduit	DR. BY:
	STC 450i Precast Concrete Stormceptor® (450 US Gallon Capacity)	CK. BY:
		DATE:
	PROJECT: LOCATION:	SCALE: N.T.S.
		DWG.#

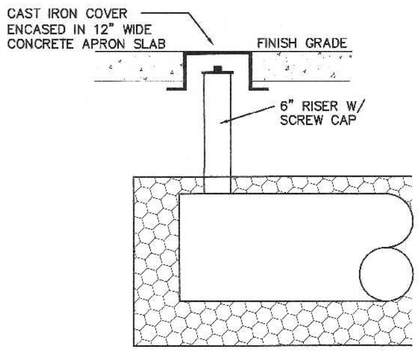

INSPECTION PORT DETAIL
DRAINAGE INFILTRATION AREAS
N.T.S.

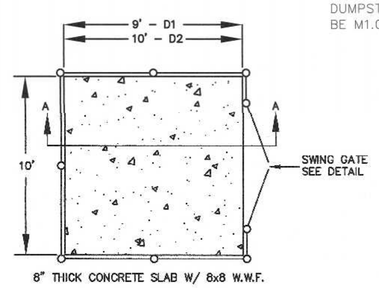

CONCRETE DUMPSTER PAD

NOTE:
GRAVEL UNDER
DUMPSTER PAD TO
BE M1.03.0 (TYPE B)

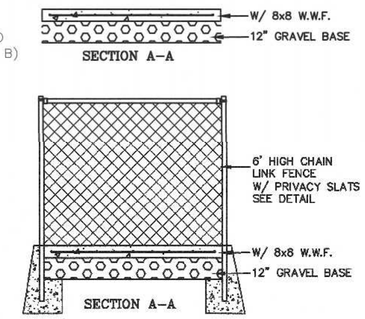

DUMPSTER AREA FENCE

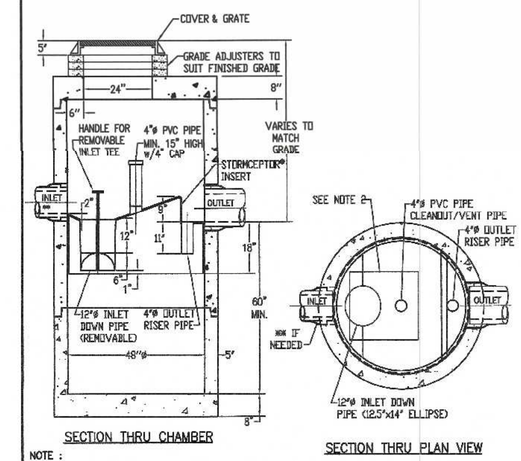

SECTION THRU CHAMBER

SECTION THRU PLAN VIEW

NOTE :
1. THE USE OF FLEXIBLE CONNECTIONS IS RECOMMENDED AT THE INLET AND OUTLET WHERE APPLICABLE.
2. THE COVER SHOULD BE POSITIONED OVER THE CLEANOUT/ VENT PIPE.
3. THE STORMCEPTOR SYSTEM IS PROTECTED BY ONE OR MORE OFF THE FOLLOWING U.S. PATENTS: #4985148, #5498331, #5725760, #5753115, #5849181.

NOTES:
1. CONTRACTOR TO CONTACT DIGSAFE PRIOR TO COMMENCEMENT OF CONSTRUCTION.
2. CONTRACTOR TO VERIFY LOCATIONS OF EXISTING UTILITIES ANY REPORT ANY DISCREPANCIES TO UNITED CONSULTANTS, INC.
3. ALL WORK SHALL CONFORM TO THE TOWN OF FRANKLIN DPW STANDARDS.
4. MAINTAIN A MINIMUM OF 10' SEPARATION FROM THE WATER SERVICE TO THE SEWER SERVICE.

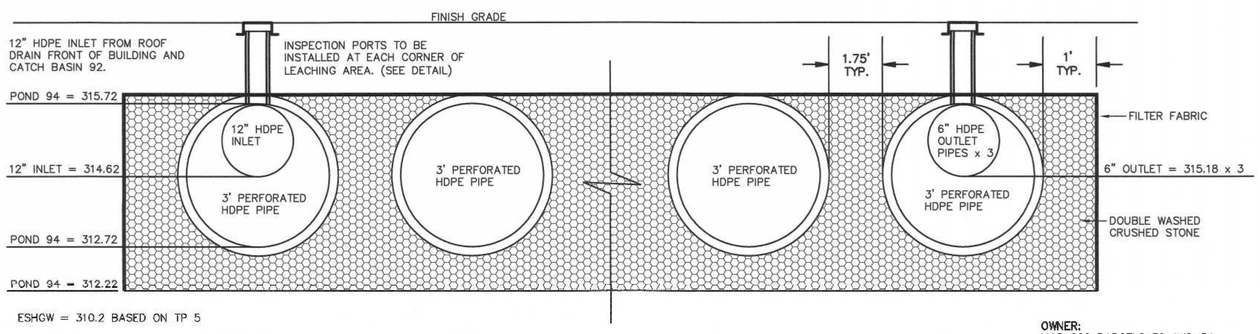

ESHGW = 310.2 BASED ON TP 5

NOTE:
INFILTRATION POND 94
CONSISTS OF 6 ROWS OF 3'
DIAMETER PERFORATED HDPE
PIPE 70' IN LENGTH.
STONE EXTENTS 31.75' X 72'

DRAINAGE INFILTRATION AREA

THE DESIGN ENGINEER SHALL INSPECT THE EXCAVATION OF THE SOIL INFILTRATION AREA PRIOR TO ANY FILL BEING PLACED.

OWNER:
MAP 286 PARCELS 32 AND 34
70 EAST CENTRAL STREET, LLC
37 EAST CENTRAL STREET
FRANKLIN, MASSACHUSETTS

OWNER MAP 286 PARCEL 33
JOHN AND CARMEL SHERRY
88 EAST CENTRAL STREET

APPLICANT:
70 EAST CENTRAL STREET, LLC
37 EAST CENTRAL STREET
FRANKLIN, MASSACHUSETTS

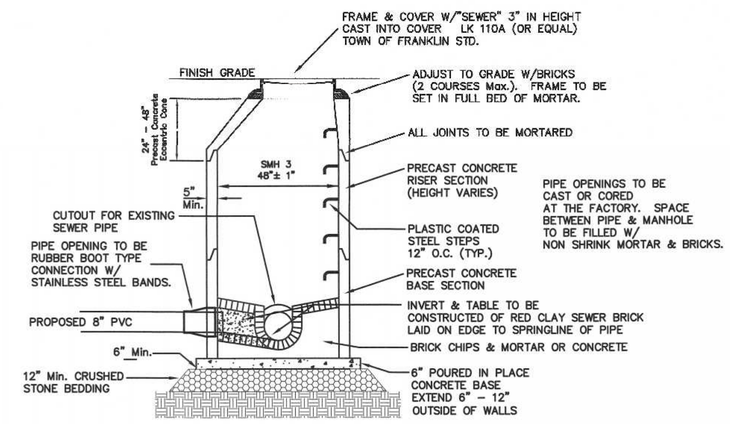

PRECAST DOG HOUSE SEWER MANHOLE

COMMONWEALTH OF MASSACHUSETTS
CARLOS A. QUINTAL
CIVIL
No. 30812
REGISTERED PROFESSIONAL ENGINEER

CARLOS A. QUINTAL P.E. #30812

SITE PLAN MODIFICATION
CONSTRUCTION DETAIL PLAN – 2
70, 72, 88 AND 94 EAST CENTRAL STREET
FRANKLIN, MASSACHUSETTS
PREPARED FOR
70 EAST CENTRAL STREET, LLC
37 EAST CENTRAL STREET
FRANKLIN, MASSACHUSETTS
DECEMBER 24, 2021
SCALE: 1" = 20'

SITE PLAN APPROVAL
REQUIRED
FRANKLIN PLANNING BOARD

DATE

GRAPHIC SCALE
20 0 10 20 40 80
(IN FEET)
1 inch = 20 ft.

NO.	DATE	DESCRIPTION	BY

DATE		INT.
6/19	FIELD BY:	BL
BK# 74	FIELD BOOK	PG# 63
12/21	CALCS BY:	RRG
12/21	DESIGNED BY:	RRG
12/21	DRAWN BY:	COMP
12/21	CHECKED BY:	CAQ

UNITED CONSULTANTS INC.
850 FRANKLIN STREET SUITE 11D
WRENTHAM, MASSACHUSETTS 02093
508-384-6560 FAX 508-384-6566

DATE	DEC. 24, 2021
SCALE	1" = 20'
PROJECT	UC1334
SHEET	8 of 9

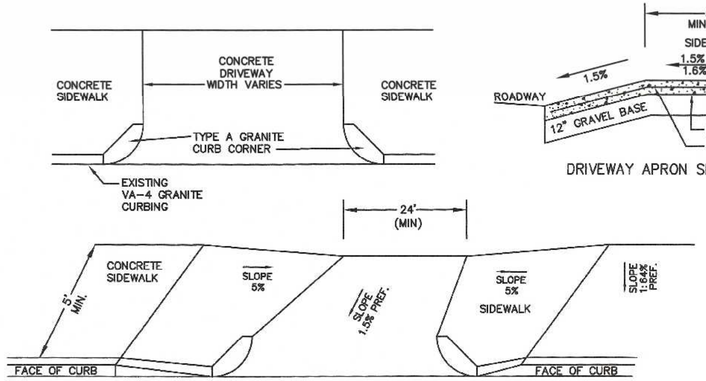

DRIVEWAY APRON

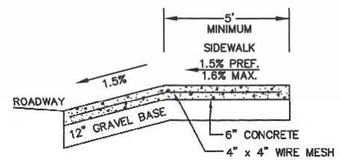

DRIVEWAY APRON SECTION

NOTES:
1. CROSS SLOPE ON ANY RAMP, LANDING OR ACCESSIBLE ROUTE SHALL NOT EXCEED 3/16" PER FOOT.
2. THE SIDEWALKS ARE 5' MINIMUM IN WIDTH.
3. ALL SIDWALKS SHALL BE 4,000 PSI CONCRETE.
4. GRAVEL UNDER SIDEWALK TO BE M1.03.0 (TYPE B)

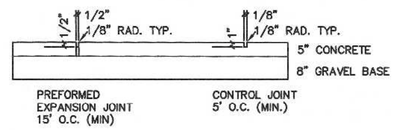

SIDEWALK JOINT DETAIL

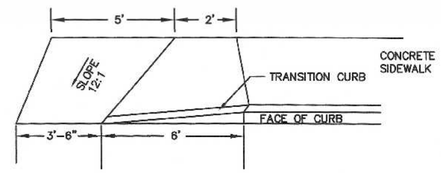

WHEELCHAIR RAMP

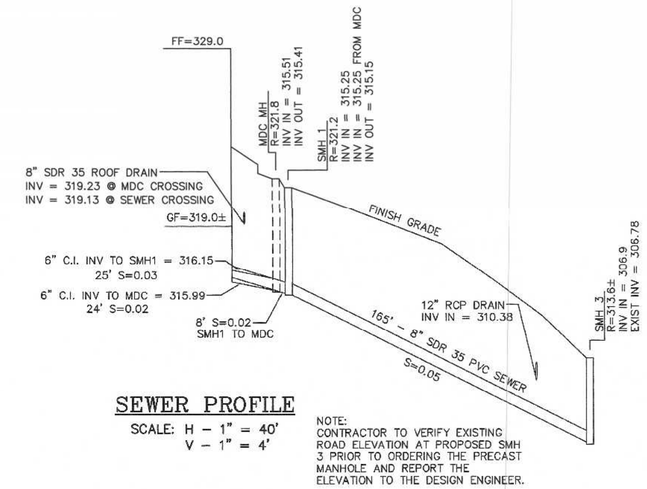

SEWER PROFILE

SCALE: H – 1" = 40'
V – 1" = 4'

NOTE:
CONTRACTOR TO VERIFY EXISTING ROAD ELEVATION AT PROPOSED SMH 3 PRIOR TO ORDERING THE PRECAST MANHOLE AND REPORT THE ELEVATION TO THE DESIGN ENGINEER.

SEWER NOTE:
THE PROJECT PLUMBING ENGINEER SHALL CONFIRM THE ELEVATIONS OF THE SEWER CONNECTIONS UPON COMPLETION OF THE FLOOR DRAIN DESIGN. ANY REVISIONS SHALL BE REPORTED TO THE DESIGN ENGINEER PRIOR TO COMMENCING WITH CONSTRUCTION.

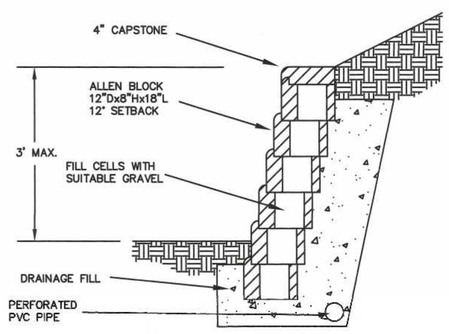

RETAINING WALL DETAIL

N.T.S.

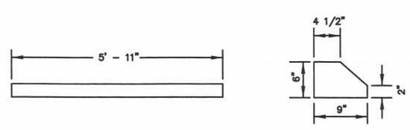

BUMPER CURB DETAIL

BUMPER CURB SHALL BE E.F. SHEA ITEM NO. B-BBSF OR APPROVED EQUAL.

Typical Siltsack® Construction - Type B

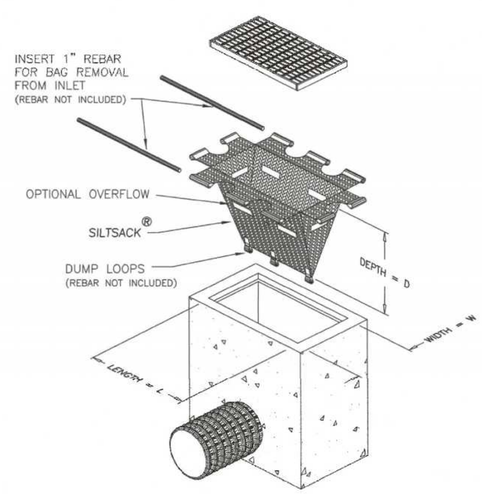

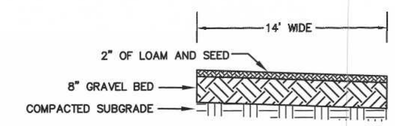

EMERGENCY ACCESS DRIVE

COMMONWEALTH OF MASSACHUSETTS
CARLOS A. QUINTAL
CIVIL
No. 30812
PROFESSIONAL ENGINEER

CARLOS A. QUINTAL P.E. #30812

SITE PLAN MODIFICATION
CONSTRUCTION DETAIL PLAN – 3
70, 72, 88 AND 94 EAST CENTRAL STREET
FRANKLIN, MASSACHUSETTS
PREPARED FOR
70 EAST CENTRAL STREET, LLC
37 EAST CENTRAL STREET
FRANKLIN, MASSACHUSETTS
DECEMBER 24, 2021
SCALE: 1" = 20'

SITE PLAN APPROVAL
REQUIRED
FRANKLIN PLANNING BOARD

DATE

GRAPHIC SCALE

20 0 10 20 40 80

(IN FEET)
1 inch = 20 ft.

NO.	DATE	DESCRIPTION	BY

OWNER:
MAP 286 PARCELS 32 AND 34
70 EAST CENTRAL STREET, LLC
37 EAST CENTRAL STREET
FRANKLIN, MASSACHUSETTS

OWNER MAP 286 PARCEL 33
JOHN AND CARMEL SHERRY
88 EAST CENTRAL STREET

APPLICANT:
70 EAST CENTRAL STREET, LLC
37 EAST CENTRAL STREET
FRANKLIN, MASSACHUSETTS

DATE		INT.
6/19	FIELD BY:	BL
BK# 74	FIELD BOOK	PG# 63
12/21	CALCS BY:	RRG
12/21	DESIGNED BY:	RRG
12/21	DRAWN BY:	COMP
12/21	CHECKED BY:	CAQ

UNITED CONSULTANTS INC.
850 FRANKLIN STREET SUITE 11D
WRENTHAM, MASSACHUSETTS 02093
508-384-6560 FAX 508-384-6566

DATE DEC. 24, 2021
SCALE 1" = 20'
PROJECT UC1334
SHEET 9 of 9