237 PLEASANT STREET

TOWN OF FRANKLIN, NORFOLK COUNTY, MASSACHUSETTS

CIVIL DRAWING INDEX

SHEET NUMBER	DRAWING TITLE	DATE	LAST REVISED
CS001	SITE COVER SHEET	09-10-2022	01-26-2023
CS002	MASTER LEGEND & NOTES	09-10-2022	
VB101	EXISTING CONDITIONS SURVEY	09-10-2022	
CS100	SITE PLAN	09-10-2022	01-26-2023
CS501	SITE DETAILS I	09-10-2022	01-11-2023
CS502	SITE DETAILS II	09-10-2022	01-11-2023
CS503	SITE DETAILS III	09-10-2022	
CG100	GRADING & DRAINAGE PLAN	09-10-2022	01-26-2023
CG501	GRADING & DRAINAGE DETAILS I	09-10-2022	
CG502	GRADING & DRAINAGE DETAILS II	09-10-2022	01-26-2023
CU100	UTILITY PLAN	09-10-2022	01-26-2023
CU501	UTILITY DETAILS I	09-10-2022	
CU502	UTILITY DETAILS II	09-10-2022	
CE100	SOIL EROSION & SEDIMENT CONTROL PLAN	09-10-2022	01-26-2023
CE501	SOIL EROSION & SEDIMENT CONTROL DETAILS I	09-10-2022	
CD100	DEMOLITION PLAN	09-10-2022	01-26-2023
TM100	TURNING MOVEMENTS PLAN	09-10-2022	
LL100	LIGHTING PLAN	09-10-2022	01-26-2023
LL501	LIGHTING DETAILS	09-10-2022	
LP100	PLANTING PLAN	09-10-2022	01-26-2023
LP501	PLANTING DETAILS	09-10-2022	

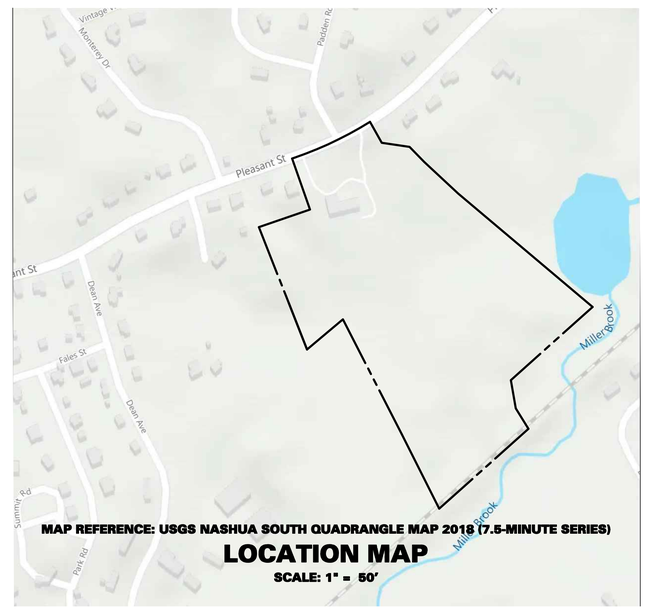

MAP REFERENCE: USGS NASHUA SOUTH QUADRANGLE MAP 2018 (7.5-MINUTE SERIES)

LOCATION MAP

SCALE: 1" = 50'

RELEASE DATES

DATE	ISSUED FOR
09-10-2022	DESIGN REVIEW AND PRICING
11-23-2022	STORMWATER REPORT
01-11-2023	PEER REVIEW COMMENTS
01-26-2023	PEER REVIEW COMMENTS

Date	Description	No.
01/26/2023	PEER REVIEW COMMENTS	3
01/11/2023	PEER REVIEW COMMENTS	2
11/23/2022	STORMWATER REPORT	1

Revisions

COMMONWEALTH OF MASSACHUSETTS
FRANK HOLMES
CIVIL
No. 40203
REGISTERED PROFESSIONAL ENGINEER

OWNER
ST JOHNS EPISCOPAL CHURCH
237 PLEASANT ST
FRANKLIN, MA 02038

APPLICANT
THE COMMUNITY BUILDERS INC.
C/O JOHN HARDING
185 DARTMOUTH ST, 9TH FLOOR
BOSTON, MA 02116
(617) 695-9595

ARCHITECT
DBVW ARCHITECTS
C/O KARISSA KUHNS
111 CHESTNUT ST
PROVIDENCE, RI 02903
(401) 831-1240

CIVIL ENGINEER, LAND SURVEY, TRAFFIC ENGINEER, ENVIRONMENTAL ENGINEER, GEOTECHNICAL ENGINEER & LANDSCAPE ARCHITECT
LANGAN ENGINEERING & ENVIRONMENTAL SERVICES, INC
C/O FRANK HOLMES
100 CAMBRIDGE STREET
BOSTON, MA 02114
(617) 824-9100

STRUCTURAL ENGINEER
RSE ASSOCIATES INC.
63 PLEASANT STREET, SUITE 300
WATERTOWN, MA 02472
(617) 926-9300

MEP ENGINEER
ENGINEERING DESIGN SERVICES
141 INDUSTRIAL DRIVE
SLATERVILLE, RI 02876
(401) 765-7659

FOR PERMITTING ONLY, NOT FOR CONSTRUCTION

LANGAN
Langan Engineering and Environmental Services, Inc.
100 Cambridge Street, Suite 1310
Boston, MA 02114
T: 617.824.9100 F: 617.824.9101 www.langan.com

Project
237 PLEASANT STREET CONCEPT PLANS
FRANKLIN
NORFOLK COUNTY MASSACHUSETTS

Drawing Title
COVER SHEET

Project No.	Drawing No.
151019602	CS001
Date: 09/10/2022	
Drawn By	
Checked By	

© 2022 Langan

GENERAL CIVIL NOTES

1. PLANIMETRIC AND TOPOGRAPHIC INFORMATION SHOWN HEREON HAS BEEN OBTAINED FROM GROUND SURVEYS BY PRECISION LAND SURVEYING, INC. THE EXISTING CONDITIONS SHOWN HERE ARE FROM SURVEY DATA UPDATED THROUGH 5/26/2021.
2. WETLANDS DELINEATED BY LEC ENVIRONMENTAL CONSULTANTS AND LOCATED BY PRECISION LAND SURVEYING, INC.
3. PROPOSED SITE WORK IMPROVEMENTS SHALL CONFORM TO THE STANDARD DETAILS AND SPECIFICATIONS OF THE TOWN OF FRANKLIN. IN THE ABSENCE OF LOCAL STANDARDS, SITE WORK SHALL CONFORM TO THE REQUIREMENTS OF MASSACHUSETTS DOT STANDARD DETAILS.
4. THE CONTRACTOR IS RESPONSIBLE FOR CONTACTING DIG SAFE (WWW.DIGSAFE.COM), EXCAVATION TEST HOLES, PERFORMING TEST BORINGS, AND PERFORMING WHATEVER ADDITIONAL INVESTIGATION NECESSARY TO PROTECT AND MAINTAIN ALL EXISTING UTILITIES TO REMAIN THROUGHOUT THE CONSTRUCTION PERIOD. ANY CONFLICTS BETWEEN EXISTING UTILITIES AND PROPOSED UTILITIES DISCOVERED DURING CONSTRUCTION SHALL BE PROMPTLY REPORTED TO THE PROJECT ENGINEER.
5. COORDINATE WITH ARCHITECTURAL DRAWINGS FOR LOCATIONS, DIMENSIONS AND DETAILS OF ALL DOORS, RAMPS, SIDEWALKS AND WALLS ASSOCIATED WITH THE BUILDING.
6. ALL IMPROVEMENTS CONSTRUCTED IN THE TOWN PUBLIC RIGHT-OF-WAY SHALL CONFORM TO TOWN OF FRANKLIN STANDARD DETAILS. IN THE ABSENCE OF LOCAL DETAILS & REQUIREMENTS AND WORK IN THE STATE RIGHT-OF-WAY SHALL COMPLY WITH THE STATE OF MASSACHUSETTS DEPARTMENT OF TRANSPORTATION STANDARD SPECIFICATIONS FOR ROADS AND BRIDGES, THE COMMONWEALTH OF MASSACHUSETTS DEPARTMENT OF TRANSPORTATION STANDARD SPECIFICATIONS (2021 EDITION) AND THE MASSACHUSETTS DEPARTMENT OF TRANSPORTATION SUPPLEMENTAL SPECIFICATIONS (DATED SEPTEMBER 30, 2021).
7. FOR AREAS OUTSIDE THE PROPERTY LINES, REPAIR AND/OR REPLACE ALL DAMAGE DONE TO EXISTING ELEMENTS (SIDEWALKS, PAVING, LANDSCAPING, ETC) AS REQUIRED BY OWNER AND/OR GOVERNING AUTHORITY.
8. ALL SIGNS AND PAVEMENT MARKINGS SHALL CONFORM TO THE LATEST EDITION OF THE MUTCD AND MASSACHUSETTS DEPARTMENT OF TRANSPORTATION REGULATIONS.
9. ABBREVIATIONS:

ARCH. = ARCHITECTURAL
AD = AREA DRAIN
BC = BOTTOM OF CURB
BW = BOTTOM OF WALL
CB = CATCH BASIN
CLDI = CONCRETE LINED DUCTILE IRON
CO = CLEAN OUT
CONC. = CONCRETE
DCB = DOUBLE CATCH BASIN
DMH = DRAIN MANHOLE
EMH = ELECTRIC MANHOLE
EX. = EXISTING
FES = FLAIRED END SECTION
FFE = FINISHED FLOOR ELEVATION
GR = GRADE
HDPE = HIGH DENSITY POLYETHYLENE PIPE
HH = HANDHOLE
HP = HIGHPOINT
INV = INVERT
LA = LANDSCAPED AREA
LF = LINEAR FEET
LP = LOW POINT
MH = MANHOLE
NTS = NOT TO SCALE
OCS = OUTLET CONTROL STRUCTURE
PR. = PROPOSED
PVC = POLYVINYL CHLORIDE PIPE (SDR-35)
RCP = REINFORCED CONCRETE PIPE
RET. = RETAINING
RL = ROOF LEADER
R.O.W = RIGHT OF WAY
R&D = REMOVE & DISPOSE
R&R = REMOVE & REPLACE
R&S = REMOVE & SALVAGE
SSMH = SANITARY SEWER MANHOLE
TF = TOP OF FRAME
TC = TOP OF CURB
TW = TOP OF WALL
TYP. = TYPICAL
VIF = VERIFY IN FIELD
WQS = WATER QUALITY STRUCTURE

SITE PREP, DEMO & EROSION NOTES

1. CLEAR AND GRUB ALL EXISTING PLANTED AREAS WITHIN THE LIMITS OF GRADING. STOCKPILE TOPSOIL FOR REUSE.
2. SOIL AND SEDIMENT CONTROL PRACTICES MUST BE INSTALLED IN ACCORDANCE WITH THE LOCAL GOVERNING AUTHORITY, THE MASSACHUSETTS EROSION AND SEDIMENT CONTROL GUIDELINES AND THE MASSACHUSETTS STORMWATER STANDARDS.
3. CONTRACTOR SHALL PREVENT DUST, SEDIMENT AND DEBRIS FROM EXITING THE SITE AND SHALL BE RESPONSIBLE FOR CLEANUP, REPAIRS AND CORRECTIVE ACTION IF SUCH OCCURS. ADJOINING STREETS AND PROPERTIES TO BE KEPT FREE OF DEBRIS RESULTING FROM DEMOLITION AND SHALL BE CLEANED ON A DAILY BASIS OR AS NEEDED.
4. CONTRACTOR SHALL MAINTAIN THE INFILTRATION CAPACITY OF SUBGRADE WITHIN THE FOOTPRINT OF THE INFILTRATION FACILITIES. CONTRACTOR SHALL PREVENT EXCESSIVE SILT AND SEDIMENT BUILDUP AND EXCESSIVE LOADING IN THESE AREAS. IF THE INFILTRATION CAPACITY OF THESE AREAS IS COMPROMISED, THE CONTRACTOR SHALL AMEND OR MODIFY THE SUBGRADE TO RESTORE CAPACITY.
5. EXISTING TREES TO REMAIN WITHIN THE LIMIT OF WORK ARE TO BE PROTECTED. TREE PROTECTION FENCING TO BE 6' TALL CHAIN LINK FENCE AND TO BE SET UP AT DRIP LINE OF EXISTING TREES OR EXTENT OF CRITICAL ROOT ZONE, WHICHEVER IS GREATER. EXISTING TREES AND SHRUBS TO REMAIN SHALL NOT BE ALTERED UNDER ANY CIRCUMSTANCES UNLESS REVIEWED BY THE LANDSCAPE ARCHITECT AND MUST REMAIN IN THE SAME CONDITION AS OBSERVED PRIOR TO CONSTRUCTION.
6. TREE AND SHRUB REMOVAL SHALL INCLUDE THE FELLING, CUTTING, GRUBBING OUT OF ROOTS, AND SATISFACTORY OFF-SITE DISPOSAL OF ALL STUMPS AND VEGETATIVE AND EXTRANEOUS DEBRIS PRODUCED THROUGH THE REMOVAL OPERATIONS.
7. NO HEAVY MACHINERY IS TO BE USED WITHIN THE CRITICAL ROOT ZONES OF EXISTING TREES. EXCAVATION WITHIN CRITICAL ROOT ZONE IS TO BE PERFORMED BY HAND. REVIEW ALL WORK PROPOSED WITHIN THE CRITICAL ROOT ZONE WITH THE LANDSCAPE ARCHITECT PRIOR TO CONSTRUCTION.
8. ALL EXISTING UTILITIES NOT IDENTIFIED AS TO BE REMOVED ARE TO BE PROTECTED. ALL VALVE BOXES, FRAMES, GRATES AND COVERS SHALL BE ADJUSTED TO FINISHED GRADE AS REQUIRED.
9. DUST CONTROL TREATMENTS SHALL BE APPLIED AS NECESSARY TO CONTROL AND REDUCE THE AMOUNT OF DUST WHICH MAY CAUSE OFF-SITE DAMAGE, BE A HEALTH HAZARD TO HUMANS, WILDLIFE AND PLANT LIFE, OR POSE A HAZARD TO TRAFFIC SAFETY.
10. EROSION AND SEDIMENT CONTROL DEVICES MUST BE INSTALLED PRIOR TO START OF DEMOLITION AND CONSTRUCTION AND DISTURBANCE OF SITE CONTRIBUTORY DRAINAGE AREAS. THE OWNER OR ITS CONTRACTOR SHALL INSPECT, REPAIR AND REMOVE ALL SEDIMENT AND EROSION CONTROL DEVICES, AS INDICATED HEREIN. ALL EARTH CHANGES SHALL BE DESIGNED, CONSTRUCTED, AND COMPLETED IN SUCH A MANNER SO THAT THE EXPOSED AREA OF ANY DISTURBED LAND SHALL BE LIMITED TO THE SHORTEST POSSIBLE PERIOD OF TIME.
11. DISPOSAL OF COLLECTED SEDIMENT SHALL BE MADE TO AREA DESIGNATED BY THE OWNER'S SOIL ENGINEER.
12. FILTER FABRIC/SILT FENCE WILL BE INSTALLED ALONG THE TOE OF ALL CRITICAL CUT AND FILL SLOPES.
13. ALL TOPSOIL NOT TO BE USED FOR FINAL GRADING/LANDSCAPED AREAS SHALL BE REMOVED FROM THE SITE IMMEDIATELY, IN ACCORDANCE WITH APPLICABLE STATE AND LOCAL LAW. ALL TOPSOIL TO BE USED IN LANDSCAPED AREAS SHALL BE STORED/STOCKPILED IN ACCORDANCE WITH APPLICABLE STATE AND LOCAL LAW STANDARDS.
14. ALL STORM DRAINAGE OUTLETS MUST BE STABILIZED, AS REQUIRED, BEFORE THE DISCHARGE POINTS BECOME OPERATIONAL.
15. SILT FENCES AND BARRIERS MUST BE CLEANED OR REPLACED PERIODICALLY TO REMOVE BUILT-UP SILT.
16. ALL EROSION AND SEDIMENT CONTROL DEVICES MUST BE INSPECTED ON A DAILY BASIS AND CLEANED IMMEDIATELY AFTER EACH STORM.
17. ANY TEMPORARY OR PERMANENT FACILITY DESIGNED FOR THE CONVEYANCE OF WATER AROUND, THROUGH, OR FROM THE EARTH CHANGE AREA SHALL BE DESIGNED TO LIMIT THE WATER FLOW TO A NON-EROSIVE VELOCITY.
18. THE CONTRACTOR SHALL CORRECT ANY OMISSIONS, ERRORS, OR FIELD OPERATIONS IMMEDIATELY AND IN ACCORDANCE WITH THE GUIDELINES FOR SOIL EROSION AND SEDIMENT CONTROL.
19. SEDIMENT DISPOSAL AREAS AND TOPSOIL STOCKPILES NOT SCHEDULED FOR CONSTRUCTION ACTIVITIES WITHIN THIRTY (30) DAYS OF DISTURBANCE SHALL BE STABILIZED AS FOLLOWS:
    A. SOIL AMENDMENTS AS NECESSARY.
    B. ANNUAL RYE GRASS SEEDING APPLIED AT A RATE OF NOT LESS THAN 1 LB. PER 1,000 SF.
    C. MULCH ALL NEWLY SEEDED AREAS WITHIN 80 LBS. OF SALT HAY OR SMALL GRAIN STRAW PER 1,000 SF.
    D. WHEN DISTURBED AREAS ARE SCHEDULED FOR IMMEDIATE LANDSCAPING THEY MAY BE MULCHED AND SEEDED PER ITEM C ABOVE.

STORM DRAINAGE NOTES

1. ALL STORM DRAINAGE WORK SHALL BE PERFORMED IN ACCORDANCE WITH THE REQUIREMENTS AND SPECIFICATIONS/DETAILS OF THE TOWN OF FRANKLIN AND IN ACCORDANCE WITH ALL APPLICABLE LOCAL, STATE, AND FEDERAL ORDINANCES/REQUIREMENTS GOVERNING THE PROPOSED WORK.
2. THE LOCATION OF EXISTING UNDERGROUND STORM DRAINAGE INFRASTRUCTURE SHOWN HEREON IS TAKEN FROM DESIGN PLANS, AS-BUILT SKETCHES, LIMITED PHYSICAL EXPLORATION AND OTHER SOURCES OF INFORMATION AND IS NOT TO BE CONSTRUED AS AN ACCURATE "AS-BUILT" SURVEY AND IS SUBJECT TO SUCH CORRECTIONS THAT A MORE ACCURATE SURVEY MAY DISCLOSE.
3. THE EXISTING STORM DRAINAGE INDICATED HEREON MAY NOT BE LOCATED AS SHOWN. ANY DISCREPANCIES DISCOVERED DURING THE COURSE OF CONSTRUCTION SHALL BE PROMPTLY REPORTED TO THE PROJECT ENGINEER.
4. RESET ALL EXISTING STORM DRAINAGE STRUCTURES TO MASSACHUSETTS STATE STANDARDS AND AS REQUIRED BY REPAIRING, MILLING OR OVERLAYING.ALL PROPOSED STORM DRAINAGE PIPING TO UTILIZE WATER-TIGHT JOINTS.
5. CLEANOUTS SHALL BE PROVIDED FLUSH TO GRADE AT ALL LOCATIONS OF ROOF DRAIN INTERSECTIONS, BENDS AND UPSTREAM ENDS.
6. THE CONTRACTOR SHALL BE RESPONSIBLE FOR PROPERLY SIZING ALL DRAINAGE STRUCTURES AND SUBMITTING SHOP DRAWINGS TO ENGINEER FOR REVIEW.
7. THE CONTRACTOR SHALL BE RESPONSIBLE FOR ALL PAVEMENT REPAIRS REQUIRED AS A RESULT OF ANY STORMWATER WORK.

UTILITIES NOTES

1. ALL UTILITY WORK SHALL BE PERFORMED IN ACCORDANCE WITH THE REQUIREMENTS AND SPECIFICATIONS/DETAILS OF THE UTILITY COMPANY HAVING AUTHORITY OVER THE PROPOSED WORK. ALL PROPOSED UTILITY WORK SHALL BE PERFORMED IN ACCORDANCE WITH ALL APPLICABLE LOCAL, STATE, AND FEDERAL ORDINANCES/REQUIREMENTS GOVERNING THE PROPOSED WORK.
2. THE LOCATION OF EXISTING UNDERGROUND UTILITIES SHOWN HEREON IS TAKEN FROM DESIGN PLANS, AS-BUILT SKETCHES, EXISTING UTILITY COMPANY RECORDS, AND OTHER SOURCES OF INFORMATION AND IS NOT TO BE CONSTRUED AS AN ACCURATE "AS-BUILT" SURVEY AND IS SUBJECT TO SUCH CORRECTIONS THAT A MORE ACCURATE SURVEY MAY DISCLOSE.
3. THE EXISTING UTILITIES INDICATED HEREON MAY NOT BE LOCATED AS SHOWN. IN ADDITION, OTHER UTILITIES NOT SHOWN HEREON MAY BE PRESENT. ANY DISCREPANCIES DISCOVERED DURING THE COURSE OF CONSTRUCTION SHALL BE PROMPTLY REPORTED TO THE PROJECT ENGINEER.
4. THE CONTRACTOR IS SPECIFICALLY CAUTIONED THAT THE LOCATION AND/OR ELEVATION OF EXISTING UTILITIES AS SHOWN ON THESE PLANS IS BASED ON RECORDS OF THE VARIOUS UTILITY COMPANIES, AND WHERE POSSIBLE MEASUREMENTS TAKEN IN THE FIELD. THE INFORMATION IS NOT TO BE RELIED UPON AS BEING EXACT OR COMPLETE. THE CONTRACTOR MUST CALL THE APPROPRIATE UTILITY COMPANY AT LEAST 48 HOURS BEFORE ANY EXCAVATION TO REQUEST EXACT FIELD LOCATION OF UTILITIES. IT SHALL BE THE RESPONSIBILITY OF THE CONTRACTOR TO RELOCATE ALL UTILITIES WHICH CONFLICT WITH THE PROPOSED IMPROVEMENTS SHOWN ON THE PLANS. ANY DISCREPANCIES DISCOVERED DURING THE COURSE OF CONSTRUCTION SHALL BE PROMPTLY REPORTED TO THE PROJECT ENGINEER.
5. ANY UTILITY EASEMENTS REQUIRED BY ANY OF THE VARIOUS UTILITY COMPANIES SHALL BE OBTAINED, EXECUTED, AND RECORDED PRIOR TO ANY OF THE AFFECTED UTILITY WORK BEING PERFORMED.
6. ALL PROPOSED UTILITIES WILL BE LOCATED UNDERGROUND UNLESS OTHERWISE NOTED.
7. RESET ALL EXISTING UTILITY INFRASTRUCTURE, INCLUDING SANITARY MANHOLE STRUCTURES, VALVE BOXES AND VAULTS, TO PROPOSED FINISHED GRADE IN ACCORDANCE WITH MASSACHUSETTS STATE STANDARDS AND AS REQUIRED BY IMPROVEMENTS, REPAIRING, MILLING OR OVERLAYING.
8. THE CONTRACTOR SHALL BE RESPONSIBLE FOR ALL PAVEMENT REPAIRS REQUIRED AS A RESULT OF ANY UTILITY WORK.THE CONTRACTOR SHALL BE RESPONSIBLE FOR INSTALLATION OF THE DOMESTIC AND FIRE SERVICE LINE CONNECTIONS TO EXISTING MAINS.
9. TEST PITS ARE TO BE PERFORMED PRIOR TO INSTALLATION OF DOMESTIC AND FIRE SERVICE LINE CONNECTIONS TO CONFIRM THE SIZE AND MATERIAL OF THE MAIN.
10. TAPPING SLEEVES AND GATE VALVE ASSEMBLIES SHALL BE INSTALLED AT EACH DOMESTIC AND FIRE SERVICE LINE CONNECTION AND SHALL BE MANUFACTURED BY CLOW VALVE CO., MUELLER CO., OR AMERICAN VALVE AND HYDRANT.
11. SCHEDULING OF ALL DOMESTIC AND FIRE SERVICE LINE CONNECTION WORK SHALL BE COORDINATED WITH THE TOWN OF FRANKLIN WATER DIVISION TO ALLOW FOR A REPRESENTATIVE FROM THE AGENCY TO BE ONSITE TO OVERSEE THE CONNECTIONS AND PERFORM A WATER SHUTDOWN AS NEEDED.
12. WATER METERS AND ASSOCIATED ENCODER RECEIVER TRANSMITTER EQUIPMENT SHALL BE COMPATIBLE WITH THE TOWN'S EXISTING METER READING SYSTEM.
13. ALL WATER MAINS AND SERVICES SHALL HAVE A MINIMUM OF 5'-0" OF COVER. INSULATION SHALL BE USED FOR ANY MAINS AND SERVICES RECEIVING LESS THAN 5'-0" OF COVER. INSULATION SHALL BE 2-INCHES THICK, "FOAMGLASS" STYLE WITH JACKETING AS MANUFACTURED BY PITTSBURGH CORNING CORP IN ACCORDANCE WITH AWWA C552.
14. ALL WATER MAINS AND SERVICES SHALL MAINTAIN A MINIMUM VERTICAL SEPARATION OF 18-INCHES FROM OTHER UTILITIES WITH STRICT ADHERENCE TO THIS SEPARATION FOR SEWER AND DRAIN LINES IN ACCORDANCE WITH MASSDEP'S GUIDELINES AND POLICIES FOR PUBLIC WATER SYSTEMS. IF ADEQUATE SEPARATION IS NOT MAINTAINED, PIPELINES SHALL BE SLEEVED OR ENCASED IN FLOWABLE AND EXCAVATABLE CONCRETE. IN ADDITION, NO WATER MAINS OR SERVICES SHALL BE INSTALLED WITHIN THE SAME TRENCH AS OTHER UTILITIES. A MINIMUM OF 10-FEET OF HORIZONTAL SEPARATION FROM SEWER OR DRAIN LINES SHALL BE MAINTAINED.
15. VALVE BOXES SHALL BE CAST IRON, ADJUSTABLE SLIDING HEAVY PATTERN TYPE WITH FLANGE ON THE TOP OF THE SECTION, BE STAMPED "WATER" ON THE TOP COVER, BE DIRT-TIGHT, AND FULLY ENCLOSE THE VALVE OPERATING NUT AND STUFFING BOX.
16. ALL FIRE HYDRANTS SHALL MEET TOWN OF FRANKLIN DESIGN STANDARDS.

LEGEND

	EXISTING	PROPOSED
PROPERTY LINE		
LIMIT OF DISTURBANCE		LOD
100' WETLAND BUFFER ZONE		
WETLANDS LIMITS		
CONSTRUCTION FENCING		
COMPOST FILTER TUBE & SILT FENCE		
R&D STRUCTURE AND FOUNDATIONS		
DEMOLISH EXISTING PAVEMENT		
MILL EXISTING PAVEMENT		
STABILIZED CONSTRUCTION ENTRANCE		
UTILITY REMOVAL		
WALL REMOVAL		
RIP RAP OUTLET PROTECTION		
MILL AND OVERLAY PAVEMENT		
UNDERGROUND ELECTRIC CONDUIT		UE
UNDERGROUND TELE/COM CONDUIT		UT
NATURAL GAS PIPING		G
WATER SERVICE LINES		W
SANITARY SEWER PIPE		
STORM SEWER PIPE		
TRENCH DRAIN		
STORM CATCH BASIN		
STORM AREA DRAIN		
BMP INSPECTION PORT		
STORM MANHOLE		
CATCH BASIN		
TELE/COMM AND ELECTRIC HAND HOLES		
SANITARY SEWER MANHOLE		
GATE VALVE		
FIRE HYDRANT		
TREE REMOVAL		
INLET PROTECTION		
R&D LIGHT POLE AND FIXTURE		
R&S LIGHT BOLLARD		
R&D DRAINAGE STRUCTURE		

Date	Description	No.

Revisions

COMMONWEALTH OF MASSACHUSETTS
FRANK HOLMES
CIVIL
No. 40203
REGISTERED PROFESSIONAL ENGINEER

LANGAN
Langan Engineering and Environmental Services, Inc.
100 Cambridge Street, Suite 1310
Boston, MA 02114
T: 617.824.9100 F: 617.824.9101 www.langan.com

Project
237 PLEASANT STREET CONCEPT PLANS
FRANKLIN
NORFOLK COUNTY MASSACHUSETTS

Drawing Title
NOTES & LEGENDS

Project No. 151019602
Date 09/10/2022
Drawn By
Checked By
Drawing No. CS002

© 2022 Langan

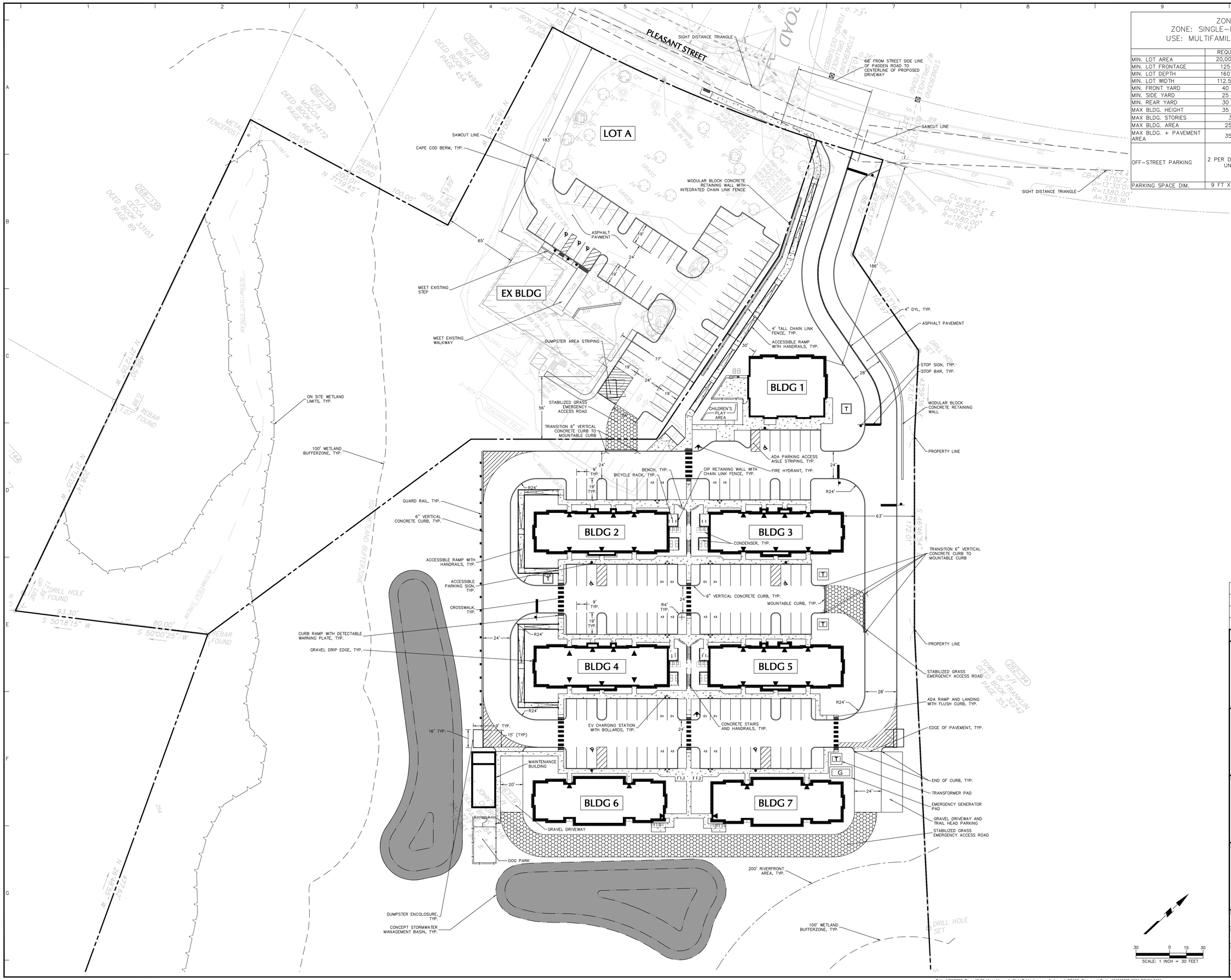

ZONING TABLE
ZONE: SINGLE-FAMILY RESIDENTIAL III
USE: MULTIFAMILY OR APARTMENT (6.1)

	REQUIRED	PROPOSED LOT A	PROPOSED LOT B
MIN. LOT AREA	20,000 SF	±188,550 SF	±659,200 SF
MIN. LOT FRONTAGE	125 FT	±257 FT	±61 FT
MIN. LOT DEPTH	160 FT	>160 FT	>160 FT
MIN. LOT WIDTH	112.50 Ft	>112.5 FT	±61 FT
MIN. FRONT YARD	40 FT	±177 FT	±186 FT
MIN. SIDE YARD	25 FT	±65 FT	±27 FT
MIN. REAR YARD	30 FT	±62 FT	±442 FT
MAX BLDG. HEIGHT	35 FT	N/A	33.7 FT
MAX BLDG. STORIES	3	N/A	3
MAX BLDG. AREA	25%	±2.8%	±4.8%
MAX BLDG. + PAVEMENT AREA	35%	±13.1%	±15.7%
OFF-STREET PARKING	2 PER DWELLING UNIT	53 SPACES	102 SPACES [1.5 PER DWELLING UNIT (96) + 1 PER 500 GSA OF COMMUNITY BUILDING (6)]
PARKING SPACE DIM.	9 FT X 19 FT	9 FT X 19 FT	9 FT X 19 FT

Date	Description	No.
01/26/2023	PEER REVIEW COMMENTS	3
01/11/2023	PEER REVIEW COMMENTS	2
11/23/2022	STORMWATER REPORT	1

Revisions

COMMONWEALTH OF MASSACHUSETTS
FRANK HOLMES
CIVIL
No. 40203
REGISTERED PROFESSIONAL ENGINEER

LANGAN
Langan Engineering and Environmental Services, Inc.
100 Cambridge Street, Suite 1310
Boston, MA 02114
T: 617.824.9100 F: 617.824.9101 www.langan.com

Project
237 PLEASANT STREET CONCEPT PLANS
FRANKLIN
NORFOLK COUNTY MASSACHUSETTS

Drawing Title
SITE PLAN

Project No. 151019602
Date 09/10/2022
Drawn By KH
Checked By FH
Drawing No. CS100

© 2022 Langan

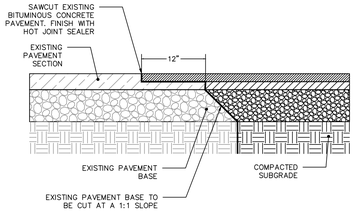

NOTES:
1. CONTRACTOR TO INSTALL TACK COAT ON ALL BUTT EDGES OF EXISTING PAVEMENT

1 SAWCUT PAVEMENT SECTION
N.T.S.

ASPHALT SECTION	SURFACE COURSE - 'X'	BINDER COURSE - 'Y'	SUBBASE - 'Z'
DRIVEWAYS AND PARKING LOTS	1.5 INCHES	2.0 INCHES	6 INCHES

NOTE: SUBJECT TO FINAL GEOTECHNICAL APPROVAL

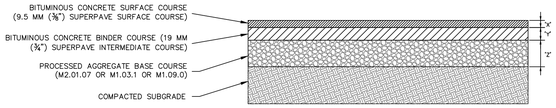

NOTES:
1. PAVING COURSES SHALL BE CONSTRUCTED IN LAYERS NOT LESS THAN 1.5 INCHES THICK PER LIFT.
2. ALL AREAS TO BE PAVED SHALL BE PROOFROLLED WITH AT LEAST 4 PASSES OF A SMOOTH ROLLER HAVING A MINIMUM STATIC DRUM WEIGHT OF 10 TONS. ANY SOFT AREAS SHALL BE REMOVED AND REPLACED WITH CLEAN, GRANULAR, FREE-DRAINING SOIL. FILL SHALL BE PLACED IN LOOSE LIFTS NOT TO EXCEED 12-INCHES AND SHALL BE COMPACTED TO AT LEAST 95% OF ITS MAXIMUM DRY DENSITY AS DETERMINED BY THE GEOTECHNICAL REPORT.
3. PAVEMENT CLASSES REFER TO MASSACHUSETTS, DEPARTMENT OF TRANSPORTATION STANDARD SPECIFICATION (MDOT SS) M3.11.03. PRESSED AGGREGATE SHALL REFER TO M2.01.07 OR M1.03.1.

2 ASPHALT PAVEMENT
N.T.S.

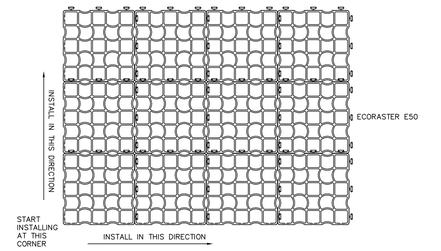

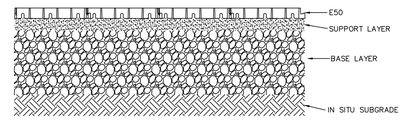

NOTES:

1. SUPPORT LAYER ~2in OF ANGULAR GRAVEL #78 OR SIMILAR. THICKNESS MAY BE REDUCED IF BASE CBR >6. BED ECORASTER INTO SUPPORT LAYER USING PLATE COMPACTOR OR SIMILAR.

2. BASE LAYER – COMPOSITION AND THICKNESS PER ENGINEER. SEE ECORASTER BEST PRACTICES MANUAL FOR TYPICAL INSTALLATIONS AND SUGGESTED PRODUCT USES AND DETAILS.

3. E50 MAY BE LEFT UNFILLED IF VEHICLE TIRE OR SURFACE LOAD PRESSURE <115psi. EDGES WHERE VEHICLES OR LOADS ENTER OR LEAVE SHOULD BE SUPPORTED BY GRAVEL FILLING OR SOLID EDGING TO MINIMIZE EDGE DEFORMATION. INSTALL ECORASTER LEVEL WITH ANY ADJACENT TRAVEL SURFACES. ANY FILLING TO BE PER ENGINEER OR PROJECT SPECIFICATIONS.

4. ALLOW FOR THERMAL EXPANSION WHEN INSTALLING IN A CONFINED AREA BY LEAVING ADEQUATE SPACE BETWEEN ECORASTER AND ADJACENT PAVEMENT OR HARD SURFACES. ECORASTER IS 100% RECYCLED LDPE WITH A WORKING TEMPERATURE RANGE OF –65 TO 150F.

5. E50 INDIVIDUAL GRIDS ARE A NOMINAL 13x13x2in WHEN ASSEMBLED. A 3x4 PREASSEMBLED MULTI GRID (SHOWN) IS SHIPPED TO THE JOB SITE FOR EASE OF INSTALLATION. WEIGHT IS 1.95 lb/sf. ECORASTER IS NONTOXIC TO FISH AND WILDLIFE.

6. GRIDS SNAP TOGETHER WITH FOOT PRESSURE (NO TOOLS REQUIRED) AND CAN BE CUT ON SITE WITH SAWSALL, CIRCULAR SAW, CONCRETE SAW OR SIMILAR.

7. ECORASTER CARRIES A 20 YEAR WARRANTY WHEN INSTALLED PER THIS DRAWING. CONSULT ENGINEER FOR ANY ADDITIONAL REQUIREMENTS ON ALL PROJECTS PRIOR TO CONSTRUCTION.

8. TYPICAL GRASS FILLING FOR THE ECORASTER LAYER IS A SANDY LOAM PER GRASS TYPE. OTHER MATERIALS USED PER ENGINEER.

9. BASE AND SUPPORT LAYER AGGREGATE SHOULD BE MIXED WITH ~30% TOPSOIL OR PER ENGINEER.

ECORASTER®

ECORASTER E50 Grass Filled		
DATE 30 JULY 2021	SCALE NTS	REV 3

3 STABILIZED GRASS PAVEMENT
N.T.S.

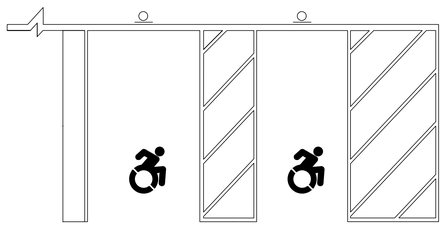

NOTES:
1. ALL PAINT SHALL BE FAST DRYING TRAFFIC PAINT, MEETING THE REQUIREMENTS OF AASHTO M248 TYPE F. PAINT SHALL BE APPLIED AS SPECIFIED BY THE MANUFACTURER.
2. SYMBOLS & PARKING STALLS SHALL CONFORM TO THE REQUIREMENTS OF THE AMERICAN DISABILITIES ACT (ADA) AND THE MANUAL ON UNIFORM TRAFFIC CONTROL DEVICES, LATEST EDITION.
3. APPLY TWO COATS OF TRAFFIC PAINT. ALLOW FOR A MINIMUM CURE TIME OF 24 HOURS BETWEEN APPLICATIONS.

4 ADA PARKING STALL STRIPING
N.T.S.

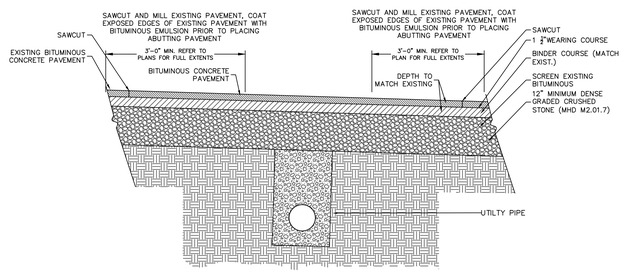

5 ASPHALT PATCHING
N.T.S.

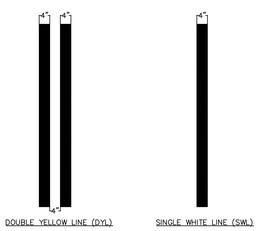

6 ROAD STRIPING
N.T.S.

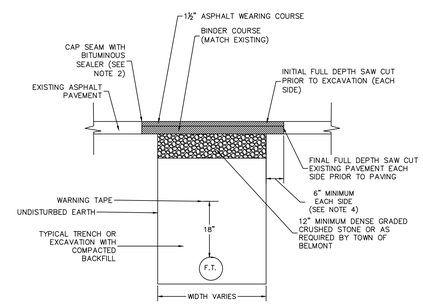

NOTES:
1. EXISTING PAVEMENT IS TO BE SAW CUT FULL DEPTH TO OBTAIN A STRAIGHT AND NEAT EDGE FOR PAVING. SAW CUT IS TO BE MADE AFTER BACKFILLING THE TRENCH AT BOTTOM OF NEW PAVEMENT SECTION.
2. ALL SEAMS BETWEEN EXISTING AND NEW SURFACES ARE TO BE SEALED WITH AN ASPHALT EMULSION.
3. PAVEMENT SECTION TO BE CONFIRMED WITH THE TOWN OF BELMONT.
4. 6 INCH MINIMUM TO BE FROM EDGE OF UNDISTURBED EARTH, EACH SIDE OF TRENCH.

7 PAVEMENT TRENCH RESTORATION
N.T.S.

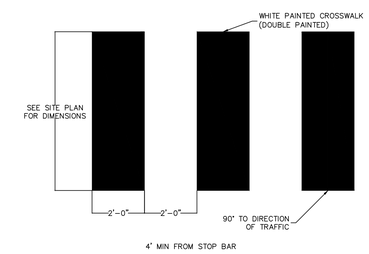

NOTES:
TWO COATS OF EPOXY RESIN PAVEMENT MARKING PAINT SHALL BE APPLIED TO ALL PROPOSED PAVEMENT MARKINGS.

8 CROSSWALK
N.T.S.

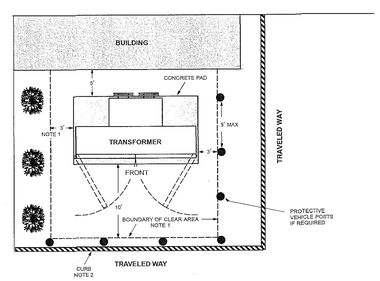

Notes
1. To inspect, provide access, operate elbow connectors and ventilate the transformer, the above specified clear area distances to buildings or shrubs shall be maintained. The distance from the building is to the concrete transformer pad. Property line shall be considered an obstruction, since fences, shrubs, etc. may be installed at a future date by adjacent property owners. Because of the possibility of cooling fins overhanging the pad, side clearances to be increased to 5 feet for transformers 1000 kVA and larger.
2. If no curb exists, or transformer is located closer than 10 feet to the traveled way, protective vehicle posts (●) shall be installed as specified in **DTR 42.061**.
3. Top of transformer pad shall be installed 3 inches above final grade.
4. Transformer shall not be located on steep grades where access to or elbow operation is made difficult.
5. Transformer shall meet the minimum distances to doors, windows, fire escapes, air intakes and walls as specified in **DTR 42.061**.
6. Transformer ***is not*** to be located with its doors facing the building.
7. Refer to **DTR 58.301** for specific instructions on the installation of the transformer pad.
8. Refer to **DSEM Section 05.32** for information on environmental considerations.

11 TRANSFORMER PAD
N.T.S.

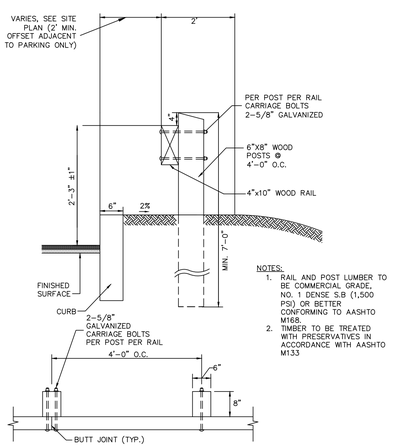

NOTES:
1. RAIL AND POST LUMBER TO BE COMMERCIAL GRADE, NO. 1 DENSE S-B (1,500 PSI) OR BETTER CONFORMING TO AASHTO M168.
2. TIMBER TO BE TREATED WITH PRESERVATIVES IN ACCORDANCE WITH AASHTO M133

9 TIMBER GUIDERAIL
N.T.S.

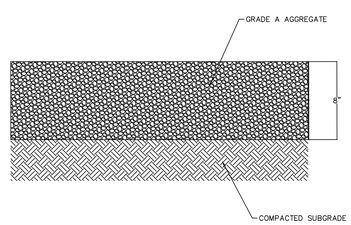

NOTES:
1. GRADE A AGGREGATE SHALL CONFORM WITH EQUIVALENT FROM MASSDOT SPECIFICATIONS, DIVISION II SECTION M2

10 GRAVEL ROAD
N.T.S.

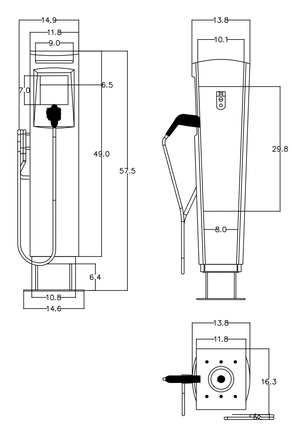

12 ELECTRIC CHARGING STATION
N.T.S.

Date	Description	No.
01/11/2023	PEER REVIEW COMMENTS	1

Revisions

COMMONWEALTH OF MASSACHUSETTS
FRANK HOLMES
CIVIL
No. 40203
REGISTERED PROFESSIONAL ENGINEER

LANGAN
Langan Engineering and Environmental Services, Inc.
100 Cambridge Street, Suite 1310
Boston, MA 02114
T: 617.824.9100 F: 617.824.9101 www.langan.com

Project
237 PLEASANT STREET CONCEPT PLANS
FRANKLIN
NORFOLK COUNTY MASSACHUSETTS

Drawing Title
SITE DETAILS I

Project No.	Drawing No.
151019602	CS501
Date 09/10/2022	
Drawn By	
Checked By	

© 2022 Langan

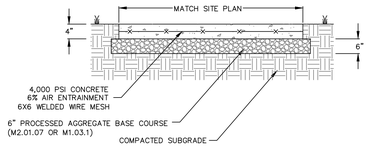

NOTES:
1. ALL CONTROL JOINTS TO BE SAWCUT TO 1/4 THE DEPTH OF SLAB.
2. SIDEWALKS TO COMPLY WITH CITY STANDARDS WHERE APPLICABLE.
3. EXPANSION AND CONTROL JOINTS SHALL BE INSTALLED PER LAYOUT AND DIMENSIONING PLANS. IF NOT SPECIFICALLY DETAILED MAXIMUM SPACING OF JOINTS SHALL BE AS FOLLOWS:
   EXPANSION – 30 FT. O.C.
   CONTROL – 10 FT. O.C.
4. CONTRACTION JOINTS SHALL BE SPACED EQUAL TO THE WIDTH BUT SHALL NOT EXCEED 10 FT. CARE SHALL BE TAKEN TO ASSURE UNIFORM GRADE, FREE OF SAGS AND SHORT GRADE CHANGES.
5. SURFACE TEXTURE SHALL BE A MEDIUM BROOM FINISH, TRANSVERSE TO THE LENGTH OF THE WALK.

1 CONCRETE SIDEWALK
N.T.S.

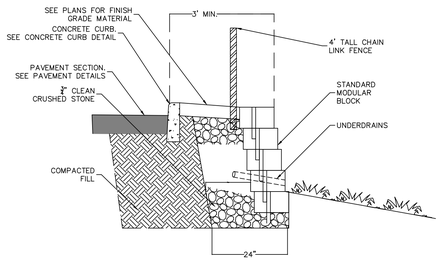

NOTES:
1. DETAIL IS SHOWN FOR GENERAL CONCEPT OF A GEOGRID REINFORCED MODULAR BLOCK RETAINING WALL. CONTRACTOR MAY SUBMIT ALTERNATE WALL CONCEPTS FOR OWNER'S AND ENGINEER'S APPROVAL.

2 MODULAR BLOCK RETAINING WALL
N.T.S.

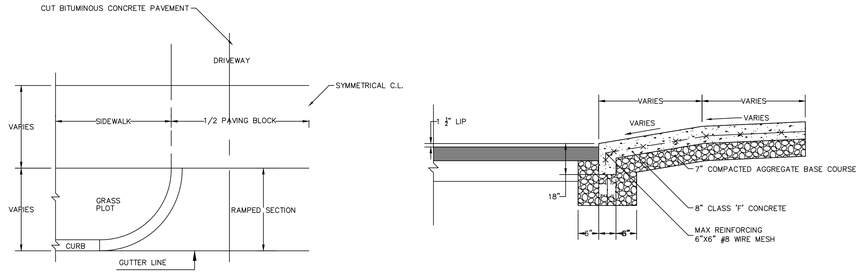

3 CONCRETE DRIVEWAY APRON
N.T.S.

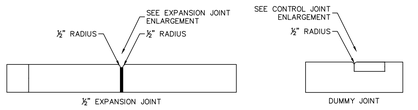

T = 5" FOR SIDEWALK
T = 8" FOR DRIVEWAY RAMP
T = 20" FOR CURB

D = 1 1/4" FOR SIDEWALK
D = 2" FOR DRIVEWAY RAMP

NOTES:
1. TRANSVERSE EXPANSION JOINTS ARE TO BE SET IN ALL CONCRETE CURBS AND CONCRETE SIDEWALKS AT 16' INTERVALS, BETWEEN A CONCRETE DRIVE-WAY RAMP AND ABUTTING CONCRETE CURB OR CONCRETE SIDEWALK, AND IN ANY LOCATION DEEMED NECESSARY BY THE TOWN ENGINEER OR THE SUPERINTENDENT OF PUBLIC WORKS.
2. TRANSVERSE DUMMY JOINTS FOR ALL SECTIONS OF CONCRETE SIDEWALK AND CONCRETE DRIVEWAY RAMPS, ARE TO BE EVENLY SPACED AT AN INTERVAL WHICH BEST APPROXIMATES 4' ON CENTER.
3. LONGITUDINAL EXPANSION JOINTS ARE TO BE SET BETWEEN ALL ABUTTING CONCRETE CURBS AND CONCRETE SIDEWALKS, ON STREET LINE IF A PRIVATE CONCRETE SIDEWALK, CONCRETE DRIVEWAY RAMP OR WALL ABUTTS, AND IN ANY LOCATION DEEMED NECESSARY BY THE TOWN ENGINEER OF THE SUPERINTENDENT OF PUBLIC WORKS.

4 CONCRETE JOINTS
N.T.S.

NOTES:
1. ALL POSTS SHALL BE OF ADEQUATE LENGTH TO MEET THE REQUIREMENTS FOR ERECTION AS STATED IN THE CURRENT "MANUAL ON UNIFORM TRAFFIC CONTROL DEVICES FOR STREETS AND HIGHWAYS".
2. ALL POSTS SHALL BE EMBEDDED 4'-6" MINIMUM BELOW GRADE.
3. ALL STEEL POSTS AND BRACKETS SHALL BE CUT, BENT, AND HOLES PUNCHED AND DRILLED BEFORE GALVANIZING. GALVANIZING SHALL BE IN CONFORMANCE WITH CURRENT A.S.T.M. SPECIFICATION A123-78 (OR LATEST REVISED).
4. POSTS SHALL BE BREAKAWAY TYPE II TWO-PIECE U-POST OR OTHER BREAKAWAY STRUCTURAL SUPPORT HARDWARE AS NOTED IN THE LATEST EDITION OF AASHTO'S "SPECIFICATIONS FOR STRUCTURAL SUPPORTS FOR HIGHWAY SIGNS, LUMINARIES, AND TRAFFIC SIGNALS."
5. SIGN PANEL SIZES SHALL DETERMINE POST TYPE AND NUMBERS AS SHOWN ON THIS DETAIL AND DIRECTIONAL SIGN SHEET.
6. BOLTS SHALL NOT PROTRUDE MORE THAN 3/4" BEYOND THE NUT WHEN TIGHT BUT SHALL ENGAGE ALL THREADS IN THE NUT.
7. HANDICAPPED PARKING SIGN SHALL CONFORM WITH CURRENT STATE & LOCAL CODES AND REGULATIONS.

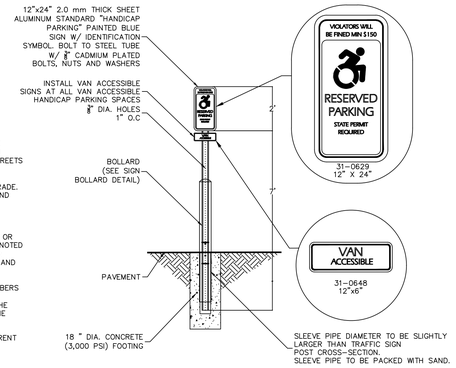

5 ADA PARKING SIGN
N.T.S.

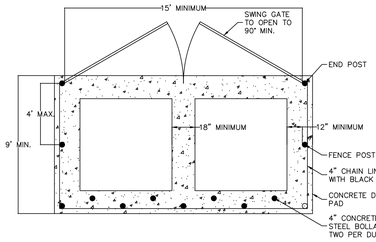

6 DUMPSTER ENCLOSURE
N.T.S.

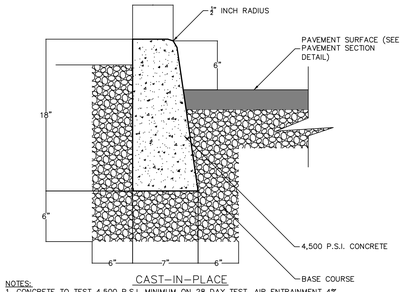

NOTES:
1. CONCRETE TO TEST 4,500 P.S.I. MINIMUM ON 28 DAY TEST. AIR ENTRAINMENT 4% TO 7%, SLUMP TO BE 3" MAXIMUM.
2. TRANSVERSE JOINTS 1/2" WIDE SHALL BE INSTALLED IN THE CAST-IN-PLACE CURB 20'-0" APART AND SHALL BE FILLED WITH PREFORMED BITUMINOUS JOINT FILLER.
3. EXPOSED CONCRETE SURFACE IS TO BE RUBBED TO PROVIDE SMOOTH FINISHED SURFACE.

7 VERTICAL CONCRETE CURB
N.T.S.

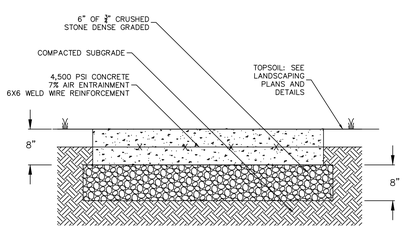

NOTES:
1. SURFACE TEXTURE SHALL BE A LIGHT BROOMING, CARE SHALL BE TAKEN TO ASSURE UNIFORM GRADE, FREE OF SAGS AND SHORT GRADE CHANGES.
2. SEE DRAWING CS101 FOR LOCATION AND DIMENSIONS

8 CONCRETE PAD
N.T.S.

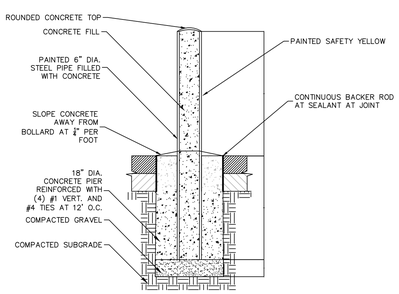

NOTES:
1. COLOR TO BE SAFETY YELLOW WITH REFLECTIVE STRIPES,

9 BOLLARD
N.T.S.

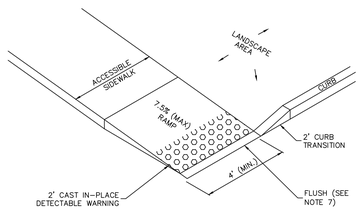

NOTES:
1. THE SIDEWALK AND CURB RAMP CROSS SLOPES SHALL NOT EXCEED 1.5 (1% MIN.).
2. THE SLOPE OF ACCESSIBLE ROUTE EXCLUDING CURB RAMPS SHALL NOT EXCEED 5%
3. THE SLOPE OF ACCESSIBLE ROUTE CURB RAMPS SHALL NOT EXCEED 7.5%.
4. A MINIMUM OF 3 FEET CLEAR SHALL BE MAINTAINED AT ANY PERMANENT OBSTACLE IN ACCESSIBLE ROUTE (I.E., HYDRANTS, UTILITY POLES, TREE WELLS, SIGNS, ETC.).
5. RAMP, CURB AND ADJACENT PAVEMENTS SHALL BE GRADED TO PREVENT PONDING.
6. WHERE ACCESSIBLE ROUTES ARE LESS THAN 5' IN WIDTH (EXCLUDING CURBING) A 5' x 5' PASSING AREA SHALL BE PROVIDED AT INTERVALS NOT TO EXCEED 200 FEET.
7. ELIMINATE CURBING (OTHER THAN VERTICAL CURBING, WHICH SHALL BE SET FLUSH) WHERE IT ABUTS ROADWAY.

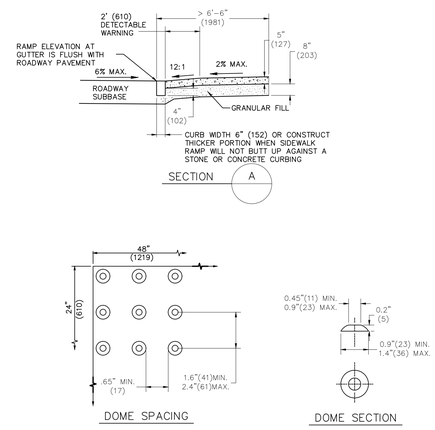

10 DEPRESSED CURB RAMP W/ DETECTABLE WARNING STRIP
N.T.S.

R1-1

NOTES:
1. SHALL BE PLACED AT THE END OF ALL BIKEPATHS WHICH INTERSECT WITH A TRAVELED WAY.

11 TRAFFIC SIGN (STOP SIGN)
N.T.S.

Date	Description	No.
01/11/2023	PEER REVIEW COMMENTS	1

Revisions

COMMONWEALTH OF MASSACHUSETTS
FRANK HOLMES
CIVIL
No. 40203
REGISTERED PROFESSIONAL ENGINEER

LANGAN
Langan Engineering and Environmental Services, Inc.
100 Cambridge Street, Suite 1310
Boston, MA 02114
T: 617.824.9100 F: 617.824.9101 www.langan.com

Project
237 PLEASANT STREET CONCEPT PLANS
FRANKLIN
NORFOLK COUNTY MASSACHUSETTS

Drawing Title
SITE PLAN DETAILS II

Project No. 151019602
Date 09/10/2022
Drawn By KBL
Checked By KH
Drawing No. CS502

© 2022 Langan

500 SERIES

MBE-0510-00010

Legacy # MLB510-M

MATERIALS: Bench ends and seat are made from solid steel flat bar and H.S. steel tube.

FINISH: All steel components are protected with E-Coat rust proofing.
The Maglin Powdercoat System provides a durable finish on all metal surfaces.

INSTALLATION: The bench is delivered pre-assembled. Holes (0.5") are provided in each foot for securing to base.

TO SPECIFY: Select MBE-0510-00010
Choose:
- Powdercoat Color

HEIGHT: 31.38" (79.7cm) LENGTH: 70" (177.8cm) DEPTH: 25.94" (65.9cm) WEIGHT: 152.8lbs (69.31kg)

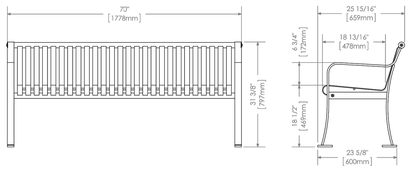

MAGLIN Site Furniture

T 800 716 5506
F 877 260 9393
www.maglin.com
sales@maglin.com

- All drawings, specifications, design and details on this page remain the property of Maglin Site Furniture Inc. and may not be used without Maglin authorization.
- Details and specifications may vary due to continuing improvements of our products.

1 BENCH AT BASIN
N.T.S.

Bola Bike Rack

landscape forms

Product Data Sheet

An artful solution for bicycle storage and security that meets Association of Pedestrian and Bicycle and Professionals (APSP) recommendations. Bola's understated design doesn't conflict with other site elements. An artful solution for bicycle storage and security that meets Association of Pedestrian and Bicycle and Professionals (APSP) recommendations. Bola's understated design doesn't conflict with other site elements.

Style	Depth	Width	Height	Weight
	1.5"	28.25"	32"	13 lbs

Bike Rack

- Capacity: 2 bikes
- Bike racks made of 1.5" o.d., .120" wall stainless steel tubing, with a #4 satin electropolish finish on bare stainless steel.
- Bola is also available in powdercoated steel.
- Bola must be embedded.
- Bola can secure two bicycles parked parallel to the rack.
- The bicycles can be headed in opposite directions, or in the same direction. The rack provides two-point contact to prevent the bicycle from tipping over.
- A standard D-shaped bike lock can secure both a wheel and the frame.

Finishes

- All metal parts are finished with Landscape Forms' proprietary Pangard IIIB polyester powdercoat, a hard yet flexible finish that resists rusting, chipping, peeling and fading.
- Call for standard color chart.

To Specify

- Select bike rack style. Specify powdercoat color or stainless steel.

Designed by Brian Kane, IDSA

Visit landscapeforms.com for more information. Specifications are subject to change without notice. Landscape Forms supports the Landscape Architecture Foundation at the Second Century level.
©2020 Landscape Forms, Inc. Printed in U.S.A.

2 BICYCLE RACK
N.T.S.

OGDEN

OGM1900-BC1-SCR7

Front to Back Left to Right

MATERIALS: The seat pan is constructed from steel. The seat employs Ipe wood, HDPE (plastic), or HDPC (paper composite) slats.
Thickness: Ipe 1", HDPE 1", HDPC 3/4"

FINISH: All steel components are protected with E-Coat rust proofing.
The Maglin Powdercoat System provides a durable finish on all metal surfaces.

INSTALLATION: The seat sections come pre-assembled with boards. Mount options come as a separate component.
Reference: INSTALLATION-INST_OGM1900 document for onsite assembly and installation instructions.

TO SPECIFY: Please contact your Maglin Site Furniture Representative.

SQUARE LEG - MS1

DIMENSIONS:
Height: 33.88" (86cm)
Depth: 21.44" (54.4cm)
Degree: 15°
Weight: Variable

PEDESTAL LEG - MS2

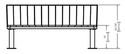

DIMENSIONS:
Height: 33.88" (86cm)
Depth: 21.44" (54.4cm)
Degree: 15°
Weight: Variable

CANTILEVER - MS3

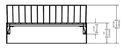

DIMENSIONS:
Height: 33.88" (86cm)
Depth: 21.44" (54.4cm)
Degree: 15°
Weight: Variable

WALLMOUNT - MS4

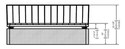

DIMENSIONS:
Height: 33.88" (86cm)
Depth: 21.44" (54.4cm)
Degree: 15°
Weight: Variable

FRONT TO BACK SLATS (FB)

LEFT TO RIGHT SLATS (LR)

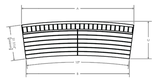

DIMENSION	RANGE (IN)	RANGE (MM)
B-1	182.5" - 271.5"	4634 - 6895
B-2	161" - 250"	4089 - 6350
A	47 3/8" - 70 5/8"	1203 - 1794
B	41 3/4" - 64 12/16"	1060 - 1649
C	22 3/4" - 23 12/2"	578 - 597

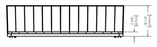

*Please Note: When HDPC seat material is chosen, seat height is reduced by 1/4".

MAGLIN

T 800-716-5506
F 877-260-9393
www.maglin.com
sales@maglin.com

- All drawings, specifications, design and details on this page remain the property of Maglin Site Furniture Inc. and may not be used without Maglin authorization.
- Details and specifications may vary due to continuing improvements of our products.

3 CURVED BENCH
N.T.S.

800.364.7681 DOGIPOT® The Smart Solution to Dog Pollution. **www.DOGIPOT.com**

ALL ALUMINUM DOGIPOT® PET STATION (ITEM #1003A-L)

SPECIFICATION, INSTALLATION AND OPERATION SHEET

YOUR ALL ALUMINUM DOGIPOT® PET STATION INCLUDES:

- Aluminum **DOGIPOT®** Pet Sign, with mounting hardware (two (2) 2¼" x ¼" tap bolts, washers and locknuts)
- Aluminum **DOGIPOT®** JUNIOR Bag Dispenser (ITEM #1002-2), with mounting hardware (two (2) 2½" x ¼" bolts, washers and locknuts)
- Two (2) keys for Dispenser bottom locking access panel
- Two (2) rolls of **DOGIPOT®** Smart Litter Pick Up Bags™ (ITEM #1402) (200 count per roll), installed in **DOGIPOT®** JUNIOR Bag Dispenser
- 10 Gallon Aluminum Trash Receptacle (ITEM #1206A-L) with attached hinged lid and trash liner bag retainer bands, with mounting hardware (one (1) 2½" x ¼" and (1) 2¾" x ¼" bolts, washers and locknuts)
- One (1) box **DOGIPOT®** Smart Liner Trash Bags™ (ITEM #1404) (50 count)

SEPARATE SHIPPING BOX

- 2" x 2" x 4' - 8' Galvanized Steel Telescopic Mounting Post, with installation hardware (two (2) carriage bolts (2½" x 5/16"), washers and locknuts)

PLEASE CHECK THE ABOVE INVENTORY AND CALL YOUR DISTRIBUTOR IF ANY PARTS ARE MISSING.

INSTALLATION AND OPERATION INSTRUCTIONS

1. Select a good visible spot in your community or park where you want to install the All Aluminum **DOGIPOT®** Pet Station.

2. Prior to installation, remove the 1¾" x 1¾" x 4' portion of the mounting post from the 2" x 2" x 4' portion of the mounting post before cementing. **Insert the larger portion of the mounting post (2" x 2" x 4') approximately 14" into an 18" deep by 8" diameter hole filled with a 40 lb. bag of "ready to use" concrete mix.** To stabilize the post while cementing, place a rod, bolt or other device through the two bottom holes, prior to inserting into the ground and cementing. Level the post in a straight vertical position and let concrete dry for at least 12 hours.

3. After the concrete is dry, insert the smaller portion of the post (1¾" x 1¾" x 4') into the larger cemented portion of the post (2' x 2' x 4') until the the first 4 holes are lined up between the two posts. Use two (2) carriage bolts, washers and locknuts to fix the telescopic post in position, the upper bolt in the top overlapping hole, pointing from right to left and the lower bolt in the bottom overlapping hole, pointing from front to back. The total height above ground with both post parts should now be approximately 6'6".

4. Start by installing the **DOGIPOT®** Pet Sign on top of the 1¾" post, with the upper hole matching the most upper hole in the square post using the enclosed 2¼" bolts, washers and locknuts. Continue installing the Aluminum **DOGIPOT®** JUNIOR Bag Dispenser according to the mounting instructions enclosed with the Dispenser, ensuring that he upper edge of the Dispenser is approximately **1" below** the lower edge of the **DOGIPOT®** Pet Sign**.**

5. Install the Aluminum **DOGIPOT®** Trash Receptacle through the pre-drilled top oval holes in the back wall of the receptacle and through the square post with the remaining bolts, washers and locknuts, using the 2¾ bolt on top and the 2½ bolt below. **The upper edge of the trash receptacle must be approximately 12½" below the lower end of your Aluminum DOGIPOT® JUNIOR Bag Dispenser so that the lid may completely open.** The upper back wall of the trash receptacle is supposed to touch the head of the lower post carriage bolt, which creates some space between the post and the receptacle, allowing the receptacle lid to open from left to right, without touching the post.

6. Insert one of the enclosed **DOGIPOT®** Smart Liner Trash Bags™ into the trash receptacle, folding it over the interior retainer bands. Proper installation and general maintenance will help expand the life of the trash receptacle and dispenser unit. **DOGIPOT®** offers Product Maintenance Paint to help cover any paint chips which may occur in the powder coating during the life of the product.

7. **ENJOY WATCHING PET OWNERS PICK UP AFTER THEIR DOGS!**

4 DOGIPOT PET STATION
N.T.S.

Date	Description	No.

Revisions

COMMONWEALTH OF MASSACHUSETTS
FRANK HOLMES
CIVIL
No. 40203
REGISTERED PROFESSIONAL ENGINEER

LANGAN
Langan Engineering and Environmental Services, Inc.
100 Cambridge Street, Suite 1310
Boston, MA 02114
T: 617.824.9100 F: 617.824.9101 www.langan.com

Project
237 PLEASANT STREET CONCEPT PLANS
FRANKLIN
NORFOLK COUNTY MASSACHUSETTS

Drawing Title
SITE PLAN DETAILS III

Project No. 151019602
Date
Drawn By
Checked By
Drawing No. CS503

© 2022 Langan

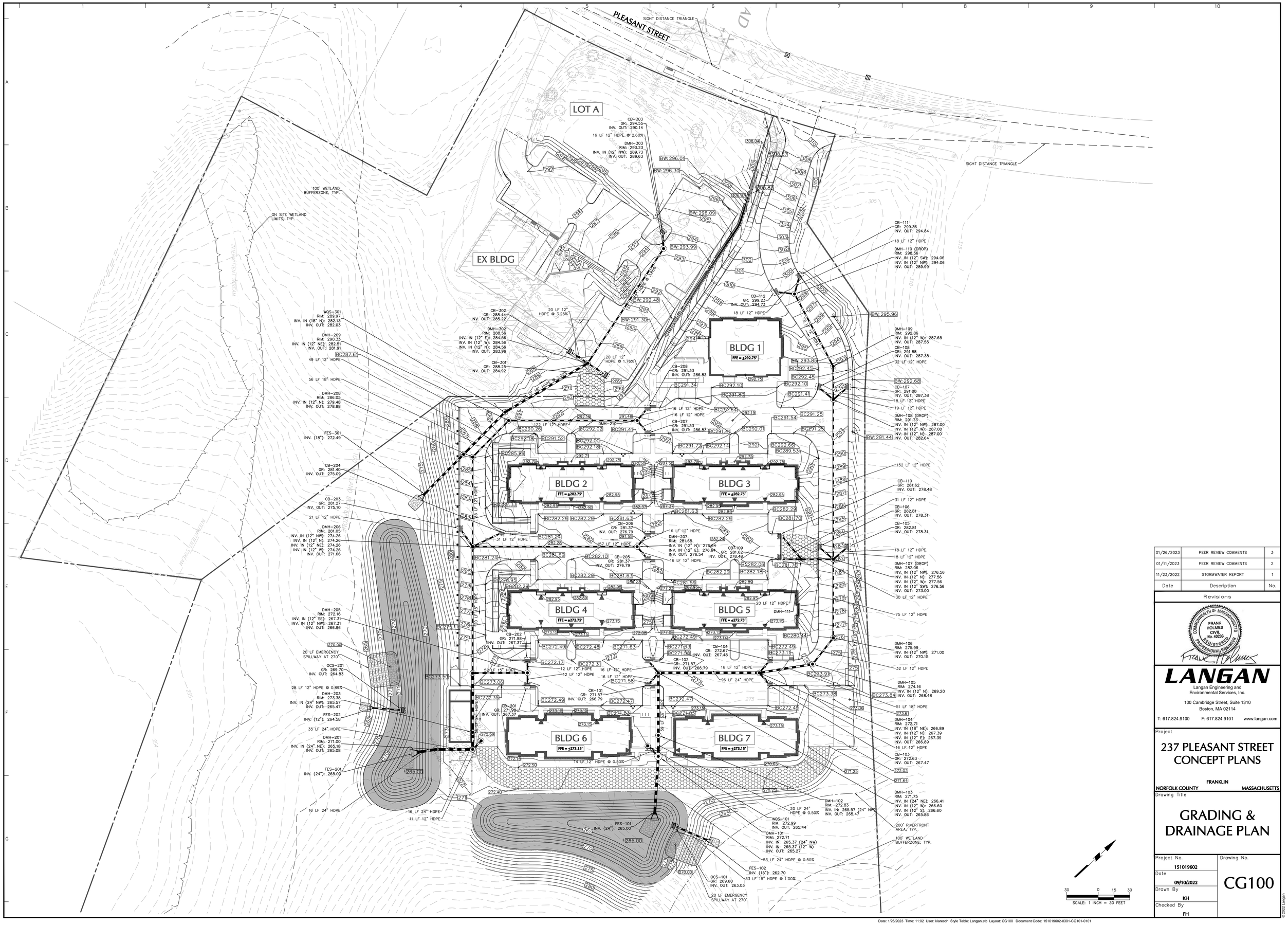

No.	Description	Date
3	PEER REVIEW COMMENTS	01/26/2023
2	PEER REVIEW COMMENTS	01/11/2023
1	STORMWATER REPORT	11/23/2022

Revisions

COMMONWEALTH OF MASSACHUSETTS
FRANK HOLMES
CIVIL
No. 40203
REGISTERED PROFESSIONAL ENGINEER

LANGAN
Langan Engineering and Environmental Services, Inc.
100 Cambridge Street, Suite 1310
Boston, MA 02114
T: 617.824.9100 F: 617.824.9101 www.langan.com

Project

237 PLEASANT STREET CONCEPT PLANS

FRANKLIN
NORFOLK COUNTY MASSACHUSETTS

Drawing Title

GRADING & DRAINAGE PLAN

Project No. 151019602
Date 09/10/2022
Drawn By KH
Checked By FH

Drawing No. CG100

© 2022 Langan

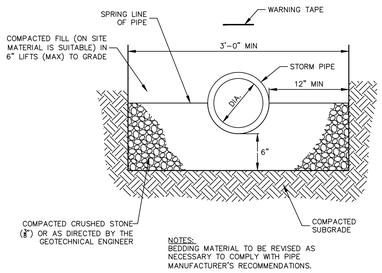

NOTES:
BEDDING MATERIAL TO BE REVISED AS NECESSARY TO COMPLY WITH PIPE MANUFACTURER'S RECOMMENDATIONS.

1 STORMWATER TRENCH / BEDDING
N.T.S.

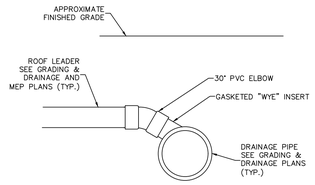

2 ROOF DRAIN CONNECTION TO MAIN
N.T.S.

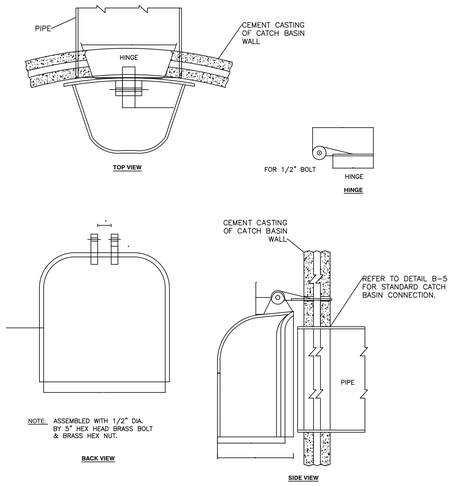

3 CATCH BASIN HOOD
N.T.S.

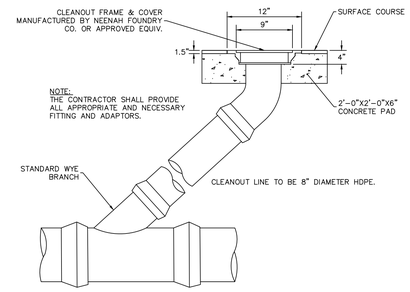

4 CLEANOUT
N.T.S.

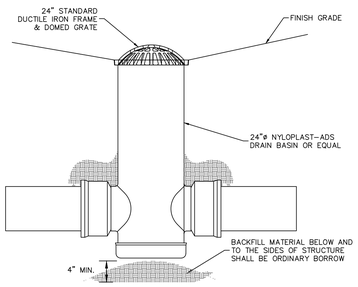

NOTES:

1. GRATES/SOLID COVER SHALL BE DUCTILE IRON PER ASTM A536 GRADE 70-50-05.2
2. FRAMES SHALL BE DUCTILE IRON PER ASTM A536 GRADE 70-50-05
3. DRAIN BASIN TO BE CUSTOM MANUFACTURED ACCORDING TO PLAN DETAILS. RISERS ARE NEEDED FOR BASINS OVER 84" DUE TO SHIPPING RESTRICTIONS.
4. DRAINAGE CONNECTION STUB JOINT TIGHTNESS SHALL CONFORM TO ASTM D3212 FOR CORRUGATED HDPE (ADS N-12/HANCOR DUAL WALL), N-12 HP, & PVC SEWER.
5 ADAPTERS CAN BE MOUNTED ON ANY ANGLE 0° TO 360°.

5 AREA DRAIN IN PLANTING
N.T.S.

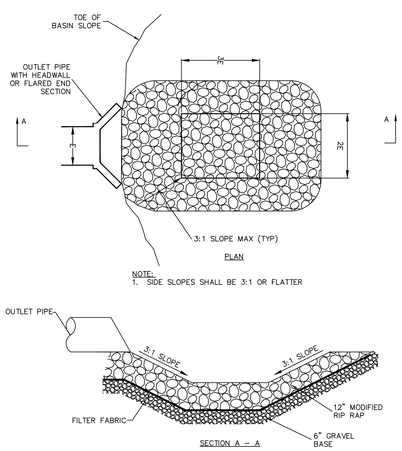

NOTE:
1. SIDE SLOPES SHALL BE 3:1 OR FLATTER

6 RIPRAP PROTECTION & SCOUR HOLE
N.T.S.

NOTES:

1. ALL CAST IN PLACE CONCRETE TO HAVE A MINIMUM 28 DAY STRENGTH OF 3000 LBS PER SQ. INCH, USING 3/4"MAXIMUM SIZE AGGREGATE
2. REINFORCING STEEL BARS ARE DEFORMED BARS OF BILLET STEEL ASTM A615 GRADE 60
3. WELDED WIRE FABRIC CONFORMS TO ASTM A185
4. CAST IRON FRAME, TYPE "A" AND COVER TYPE "A" FOR DETAILS SEE DETAILS NOS. F1-D01, F1-D04 AND F1-D05 COVERS TO BE MARKED EITHER "SEWER" OR "DRAIN".
5. DESIGN LIVE LOAD – HS 20 – 44
6. MINIMUM COVER FOR REINFORCING IN WALLS OR SLABS POURED AGAINST EARTH SHALL BE 3 INCHES. ALL OTHERS SHALL BE 2 INCHES UNLESS OTHERWISE NOTED
7. USE 2'-0" LENGTHS OF PIPE STUBS AT ALL MANHOLES FOR VC OR AC PIPE. USE 4'-0" MAX. LENGTHS OF PIPE STUBS AT ALL MANHOLES FOR RC, DI OR PVC.
8. ALL MANHOLES SHALL BE CONSTRUCTED OF REINFORCED CONCRETE SHOP DRAWINGS SUBMITTALS SHALL SHOW ALL REINFORCING DETAILS

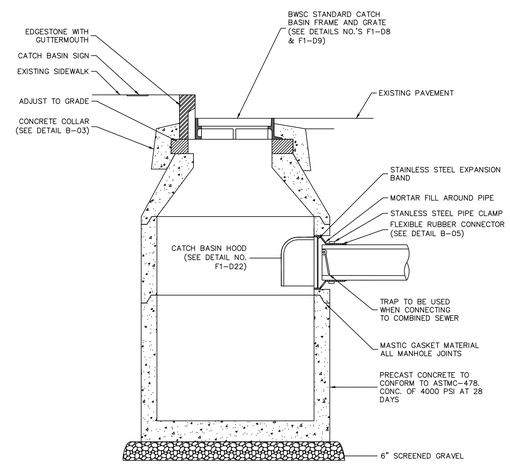

7 CATCH BASIN
N.T.S.

NOTES:

1. 5'-0"DIAMETER FOR ALL MANHOLE DEPTHS GREATER THAN 20 FEET OR WHEN ORDERED BY THE ENGINEER
2. 6" MIN. WALL THICKNESS AND 7 INCH MIN. BASE THICKNESS WITH 5'-0" DIAMETER MANHOLES
3. 6 INCH LIP OPTIONAL UNLESS OTHERWISE NOTED
4. CONCRETE INVERT AND SHELF MAY BE SUBSTITUTED IN STORM DRAIN MANHOLES AS DIRECTED BY THE ENGINEER
5. ALL CAST IN PLACE CONCRETE TO HAVE A MINIMUM 28 DAY STRENGTH OF 3000 LBS PER SQ. INCH, USING 3/4"MAXIMUM SIZE AGGREGATE
6. REINFORCING STEEL BARS ARE DEFORMED BARS OF BILLET STEEL ASTM A615 GRADE 60
7. WELDED WIRE FABRIC CONFORMS TO ASTM A185
8. CAST IRON FRAME, TYPE "A" AND COVER TYPE "A" FOR DETAILS SEE DETAILS NOS. F1-D01, F1-D04 AND F1-D05 COVERS TO BE MARKED EITHER "SEWER" OR "DRAIN".
9. DESIGN LIVE LOAD – HS 20 – 44
10. MINIMUM COVER FOR REINFORCING IN WALLS OR SLABS POURED AGAINST EARTH SHALL BE 3 INCHES. ALL OTHERS SHALL BE 2 INCHES UNLESS OTHERWISE NOTED
11. USE 2'-0" LENGTHS OF PIPE STUBS AT ALL MANHOLES FOR VC OR AC PIPE. USE 4'-0" MAX. LENGTHS OF PIPE STUBS AT ALL MANHOLES FOR RC, DI OR PVC.
12. ALL MANHOLES SHALL BE CONSTRUCTED OF REINFORCED CONCRETE SHOP DRAWINGS SUBMITTALS SHALL SHOW ALL REINFORCING DETAILS

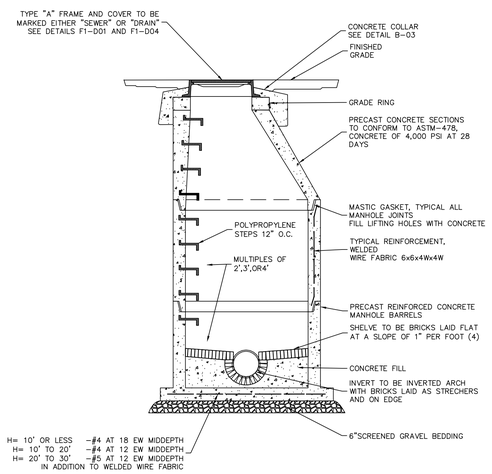

8 STORMWATER MANHOLE
N.T.S.

Date	Description	No.

Revisions

COMMONWEALTH OF MASSACHUSETTS
FRANK HOLMES
CIVIL
No. 40203
REGISTERED PROFESSIONAL ENGINEER

LANGAN
Langan Engineering and Environmental Services, Inc.
100 Cambridge Street, Suite 1310
Boston, MA 02114
T: 617.824.9100 F: 617.824.9101 www.langan.com

Project
237 PLEASANT STREET CONCEPT PLANS
FRANKLIN
NORFOLK COUNTY MASSACHUSETTS

Drawing Title
GRADING & DRAINAGE DETAILS I

Project No. 151019602
Date 09/10/2022
Drawn By
Checked By

Drawing No. CG501

© 2022 Langan

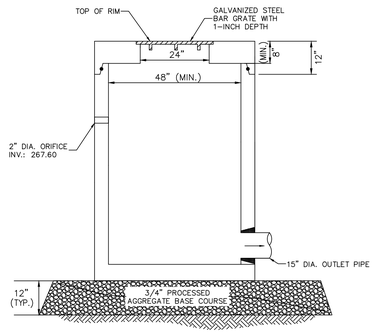

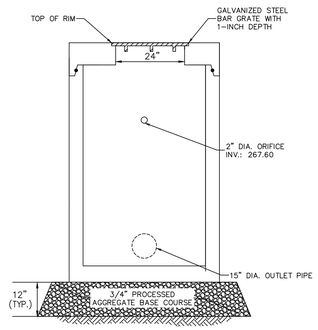

1 OUTLET CONTROL STRUCTURE (OCS-101)

N.T.S.

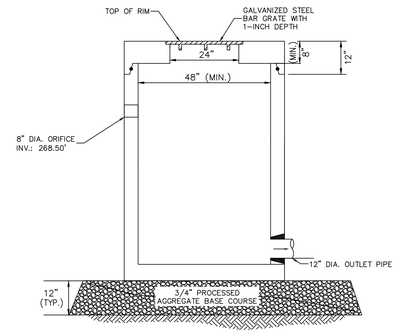

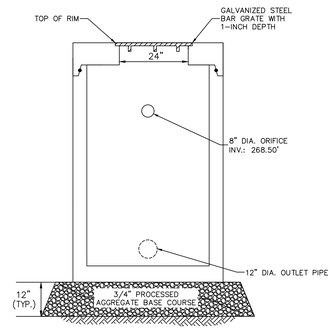

2 OUTLET CONTRL STRUCTURE (OCS-201)

N.T.S.

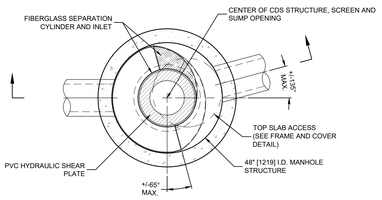

PLAN VIEW B-B

N.T.S.

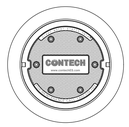

FRAME AND COVER

(DIAMETER VARIES)

N.T.S.

SITE SPECIFIC DATA REQUIREMENTS

STRUCTURE ID			
WATER QUALITY FLOW RATE (CFS OR L/s)			
PEAK FLOW RATE (CFS OR L/s)			
RETURN PERIOD OF PEAK FLOW (YRS)			
SCREEN APERTURE (2400 OR 4700)			
PIPE DATA:	I.E.	MATERIAL	DIAMETER
INLET PIPE 1			
INLET PIPE 2			
OUTLET PIPE			
RIM ELEVATION			
ANTI-FLOTATION BALLAST		WIDTH	HEIGHT
NOTES/SPECIAL REQUIREMENTS:			
* PER ENGINEER OF RECORD			

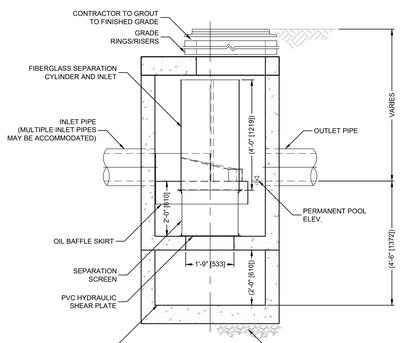

ELEVATION A-A

N.T.S.

GENERAL NOTES

1. CDS MODEL SHOWN HERE FOR PRICING. SIZE AND CONFIGURATION OF STRUCTURE TO BE CONFIRMED BY CONTECH.
2. CONTECH TO PROVIDE ALL MATERIALS UNLESS NOTED OTHERWISE.
3. FOR SITE SPECIFIC DRAWINGS WITH DETAILED STRUCTURE DIMENSIONS AND WEIGHT, PLEASE CONTACT YOUR CONTECH ENGINEERED SOLUTIONS LLC REPRESENTATIVE. www.ContechES.com
4. CDS WATER QUALITY STRUCTURE SHALL BE IN ACCORDANCE WITH ALL DESIGN DATA AND INFORMATION CONTAINED IN THIS DRAWING. CONTRACTOR TO CONFIRM STRUCTURE MEETS REQUIREMENTS OF PROJECT.
5. STRUCTURE SHALL MEET AASHTO HS20 LOAD RATING, ASSUMING EARTH COVER OF 0' - 2', AND GROUNDWATER ELEVATION AT, OR BELOW, THE OUTLET PIPE INVERT ELEVATION. ENGINEER OF RECORD TO CONFIRM ACTUAL GROUNDWATER ELEVATION. CASTINGS SHALL MEET AASHTO M306 AND BE CAST WITH THE CONTECH LOGO.
6. IF REQUIRED, PVC HYDRAULIC SHEAR PLATE IS PLACED ON SHELF AT BOTTOM OF SCREEN CYLINDER. REMOVE AND REPLACE AS NECESSARY DURING MAINTENANCE CLEANING.
7. CDS STRUCTURE SHALL BE PRECAST CONCRETE CONFORMING TO ASTM C-478 AND AASHTO LOAD FACTOR DESIGN METHOD.

INSTALLATION NOTES

A. ANY SUB-BASE, BACKFILL DEPTH, AND/OR ANTI-FLOTATION PROVISIONS ARE SITE-SPECIFIC DESIGN CONSIDERATIONS AND SHALL BE SPECIFIED BY ENGINEER OF RECORD.
B. CONTRACTOR TO PROVIDE EQUIPMENT WITH SUFFICIENT LIFTING AND REACH CAPACITY TO LIFT AND SET THE CDS MANHOLE STRUCTURE.
C. CONTRACTOR TO INSTALL JOINT SEALANT BETWEEN ALL STRUCTURE SECTIONS AND ASSEMBLE STRUCTURE.
D. CONTRACTOR TO PROVIDE, INSTALL, AND GROUT INLET AND OUTLET PIPE(S). MATCH PIPE INVERTS WITH ELEVATIONS SHOWN. ALL PIPE CENTERLINES TO MATCH PIPE OPENING CENTERLINES.
E. CONTRACTOR TO TAKE APPROPRIATE MEASURES TO ASSURE UNIT IS WATER TIGHT, HOLDING WATER TO FLOWLINE INVERT MINIMUM. IT IS SUGGESTED THAT ALL JOINTS BELOW PIPE INVERTS ARE GROUTED.

2 WATER QUALITY UNIT - CONTECH CDS UNIT

N.T.S.

Date	Description	No.
01/26/23	PEER REVIEW COMMENTS	1

Revisions

COMMONWEALTH OF MASSACHUSETTS
FRANK HOLMES
CIVIL
No. 40203
REGISTERED PROFESSIONAL ENGINEER

LANGAN

Langan Engineering and Environmental Services, Inc.

100 Cambridge Street, Suite 1310
Boston, MA 02114

T: 617.824.9100 F: 617.824.9101 www.langan.com

Project

237 PLEASANT STREET CONCEPT PLANS

FRANKLIN

NORFOLK COUNTY MASSACHUSETTS

Drawing Title

GRADING & DRAINAGE DETAILS II

Project No. 151019602	Drawing No. CG502
Date 09/10/2022	
Drawn By	
Checked By	

© 2022 Langan

PLEASANT STREET

SIGHT DISTANCE TRIANGLE

MUNICIPAL WATER LINE

CONNECT TO MUNICIPAL SANITARY SEWER
CONNECT TO MUNICIPAL WATER LINE
(LOCATION TO BE VERIFIED IN FIELD)

SANITARY SEWER TRANSITION MANHOLE

LOT A

CONNECT UNDERGROUND ELECTRIC AND TELECOM TO OVERHEAD NETWORKS AT EXISTING UTILITY POLE

SIGHT DISTANCE TRIANGLE

EX BLDG

6" WATER MAIN

UNDERGROUND TELECOM CONDUIT

UNDERGROUND ELECTRIC CONDUIT

4" FORCE MAIN

BLDG 1

TRANSFORMER PAD TYP.
TRANSFORMER AND CONCRETE PAD LOCATION TO BE COORDINATED WITH UTILITY COMPANY AND MEP

ELECTRIC HANDHOLE, TYP.

TELECOM HANDHOLE, TYP.

6" SANITARY SEWER BUILDING CONNECTION, TYP.

6" FIRE PROTECTION CONNECTION TO BUILDING, TYP.

2" DOMESTIC WATER LINE CONNECTION TO BUILDING, TYP.

SANITARY SEWER MANHOLE, TYP.

2" FORCE MAIN SEWER

8" GRAVITY SEWER, TYP.

ON SITE WETLAND LIMITS, TYP.

100' WETLAND BUFFERZONE, TYP.

FIRE HYDRANT, TYP.

GATE VALVE, TYP.

CONDENSERS, SEE MEP DRAWINGS, TYP.

BLDG 2

BLDG 3

BLDG 4

BLDG 5

BLDG 6

BLDG 7

SANITARY SEWER PUMP STATION AND WET WELL

EMERGENCY GENERATOR PAD.
GENERATOR AND CONCRETE PAD LOCATION TO BE COORDINATED WITH UTILITY COMPANY AND MEP.

200' RIVERFRONT AREA, TYP.

100' WETLAND BUFFERZONE, TYP.

SCALE: 1 INCH = 30 FEET

Date	Description	No.
01/26/2023	PEER REVIEW COMMENTS	3
01/11/2023	PEER REVIEW COMMENTS	2
11/23/2022	STORMWATER REPORT	1

Revisions

COMMONWEALTH OF MASSACHUSETTS
FRANK HOLMES
CIVIL
No. 40203
REGISTERED PROFESSIONAL ENGINEER

LANGAN
Langan Engineering and Environmental Services, Inc.
100 Cambridge Street, Suite 1310
Boston, MA 02114
T: 617.824.9100 F: 617.824.9101 www.langan.com

Project

237 PLEASANT STREET CONCEPT PLANS

FRANKLIN
NORFOLK COUNTY MASSACHUSETTS

Drawing Title

UTILITY PLAN

Project No.	Drawing No.
151019602	CU100
Date: 09/10/2022	
Drawn By: KH	
Checked By: FH	

© 2022 Langan

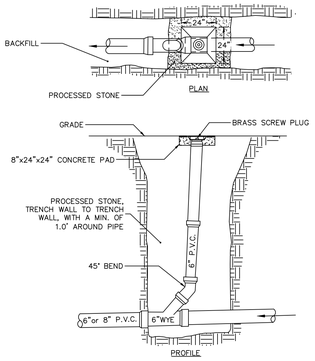

1 SANITARY SEWER CLEANOUT

N.T.S.

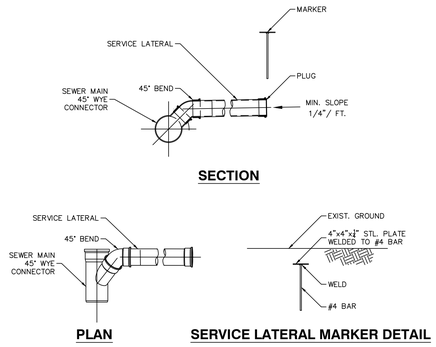

2 SANITARY SEWER MAIN CONNECTION

N.T.S.

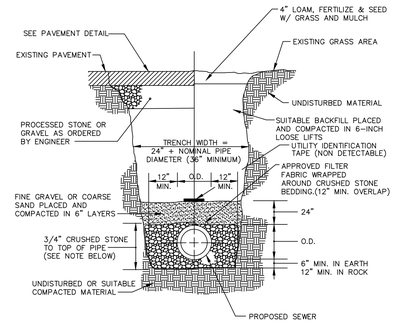

3 TRENCH - SANITARY SEWER

N.T.S.

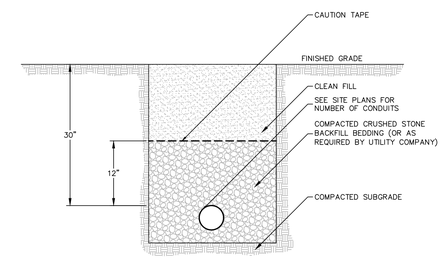

NOTES:
1. TRENCHES IN STABLE SOIL OVER 5 FT DEEP SHALL BE REINFORCED BY APPROVED OSHA METHODS.
2. TRENCHES SHALL BE COMPACTED.

4 TRENCH - TELECOM UTILITY

N.T.S.

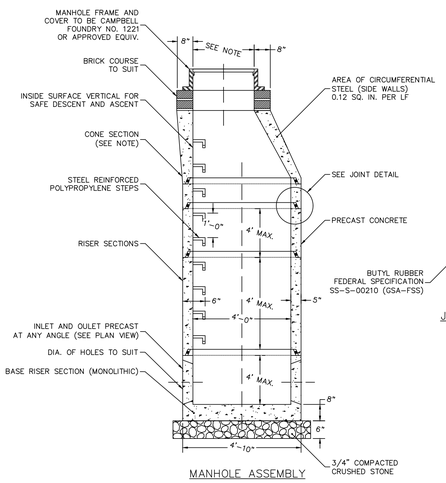

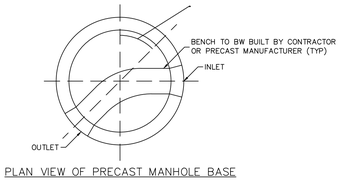

NOTE:

CONE DIMENSIONS	
DIA. OPENING	HEIGHT
24"	24" OR 36"
30"	36"

CONCRETE TO TEST 4,000 P.S.I. AT 28 DAYS IN CONFORMANCE WITH ASTM C-478-68

MANHOLES SHALL HAVE PAVED INVERTS.

JOINT DETAIL

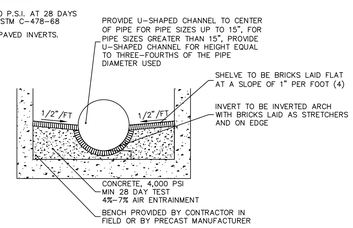

5 SANITARY SEWER MANHOLE

N.T.S.

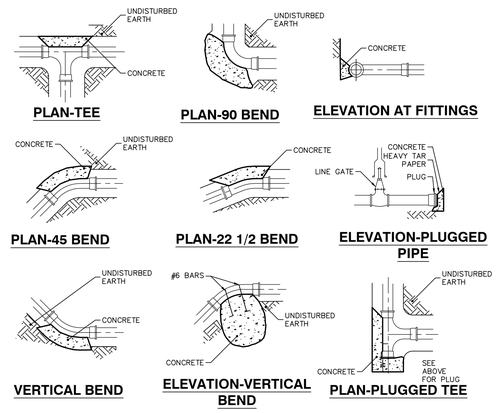

THRUST BLOCK SCHEDULE									
PIPE	TEE		22 1/2		45		90		W
SIZE	L	D	L	D	L	D	L	D	
6"	18"	15"	15"	12"	15"	12"	15"	15"	21"
8"	2'	18"	18"	12"	18"	12"	2'	18"	2'
12"	3'	2'	2'	12"	2'	12"	3'	2'	28"
16"	4'	2.5'	2'	12"	2.33'	15"	4'	2.5'	31"
20"	5.25'	3'	2'	18"	3'	2'	5.25'	3'	33"
24"	7.5'	3'	3'	18"	4'	2.5'	7.5'	3'	3'

BASIS:
2,000 LB/SQ.FT. SOIL RESISTANCE
250 PSI WATER PRESSURE
CORRECTION FACTORS FOR OTHER SOILS:
SOFT CLAY 4
SAND 2
SAND & GRAVEL 1.33
SHALE 0.4

NOTE:
1. IF SOFT MATERIALS ARE ENCOUNTERED, THE THRUST BLOCKS SIZES SHALL BE ADJUSTED ACCORDINGLY.
2. CONCRETE TO BE 3000 PSI.

6 THRUST BLOCKS

N.T.S.

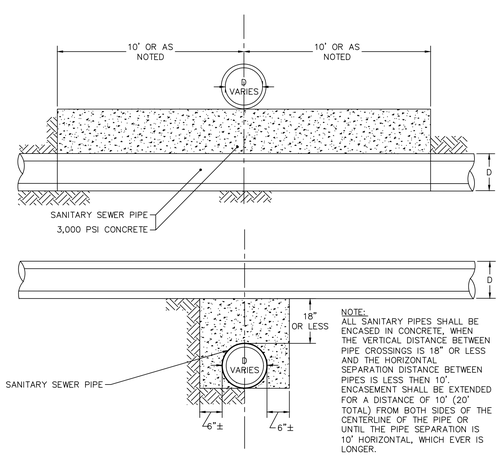

NOTE:
ALL SANITARY PIPES SHALL BE ENCASED IN CONCRETE, WHEN THE VERTICAL DISTANCE BETWEEN PIPE CROSSINGS IS 18" OR LESS AND THE HORIZONTAL SEPARATION DISTANCE BETWEEN PIPES IS LESS THEN 10'. ENCASEMENT SHALL BE EXTENDED FOR A DISTANCE OF 10' (20' TOTAL) FROM BOTH SIDES OF THE CENTERLINE OF THE PIPE OR UNTIL THE PIPE SEPARATION IS 10' HORIZONTAL, WHICH EVER IS LONGER.

7 CONCRETE ENCASEMENT FOR SANITARY SEWER

N.T.S.

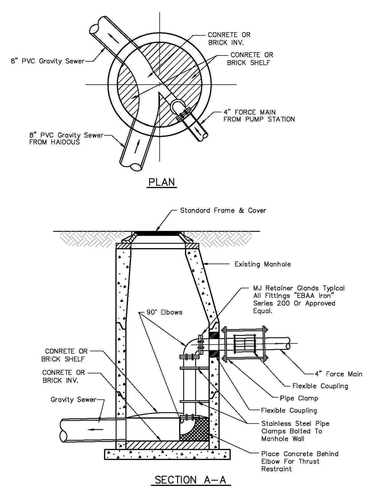

8 FORCE MAIN TERMINAL MANHOLE

N.T.S.

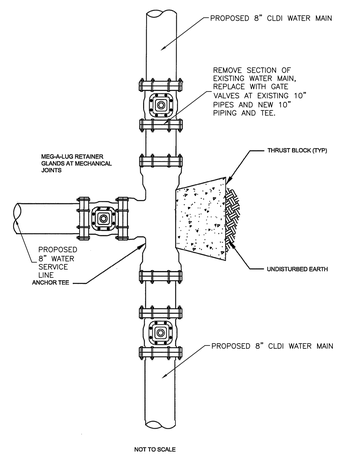

9 WATER SERVICE CONNECTION

N.T.S.

Date	Description	No.

Revisions

COMMONWEALTH OF MASSACHUSETTS
FRANK HOLMES
CIVIL
No. 40203
REGISTERED PROFESSIONAL ENGINEER

LANGAN
Langan Engineering and Environmental Services, Inc.
100 Cambridge Street, Suite 1310
Boston, MA 02114
T: 617.824.9100 F: 617.824.9101 www.langan.com

Project
237 PLEASANT STREET CONCEPT PLANS
FRANKLIN
NORFOLK COUNTY MASSACHUSETTS

Drawing Title
UTILITY DETAILS I

Project No. 151019602
Date 09/10/2022
Drawn By
Checked By

Drawing No.
CU501

© 2022 Langan

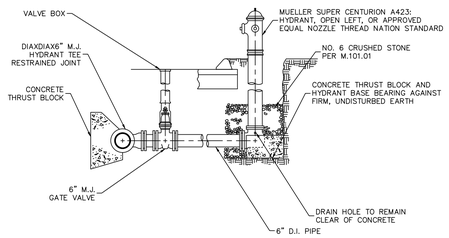

NOTES:
1. ALL MECHANICAL JOINTS TO BE RESTRAINED WITH MEGALUG RETAINER GLANDS.
2. FIRE HYDRANTS SHALL HAVE 5-1/4" MAIN VALVE OPENING, 2 – 2-1/2" HOSE NOZZLES, 1 – 4-1/2" PUMPER NOZZLE AND A 6" M.J. INLET SHOE.

1 FIRE HYDRANT
N.T.S.

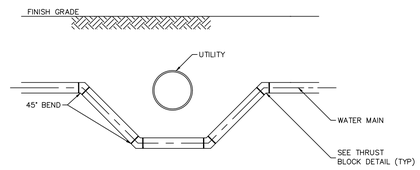

NOTES:
WATER MAIN SHALL BE CONSTRUCTED OF CEMENT LINED CLASS 52 DUCTILE IRON PIPE OR BETTER. ONE FULL LENGTH OF WATER MAIN SHOULD BE CENTERED UNDER THE CROSS PIPE SO THAT BOTH JOINTS WILL BE AS FAR FROM THE CROSSING AS POSSIBLE.

2 WATER MAIN DROP
N.T.S.

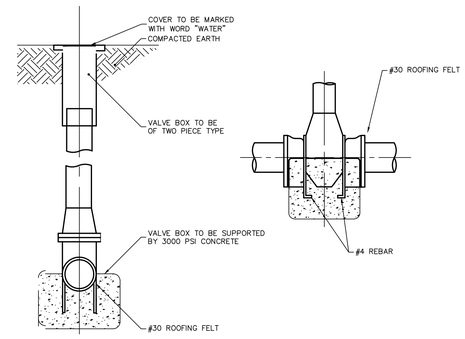

3 GATE VALVE
N.T.S.

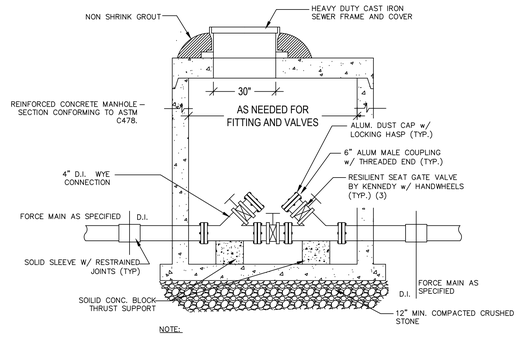

NOTE:
1. ALL JOINTS TO BE SEALED AND GASKETED TO BE WATERTIGHT.
2. KOR-N-SEAL AT PIPE INLET AND OUTLET.
3. STRUCTURE SHALL HAVE A BITUMASTIC COATING.

4 FORCE MAIN CLEANOUT
N.T.S.

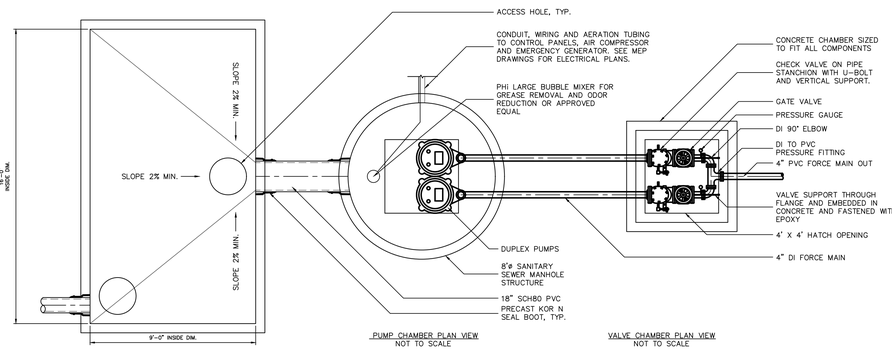

PUMP CHAMBER PLAN VIEW
NOT TO SCALE

VALVE CHAMBER PLAN VIEW
NOT TO SCALE

PUMP CHAMBER PLAN VIEW
NOT TO SCALE

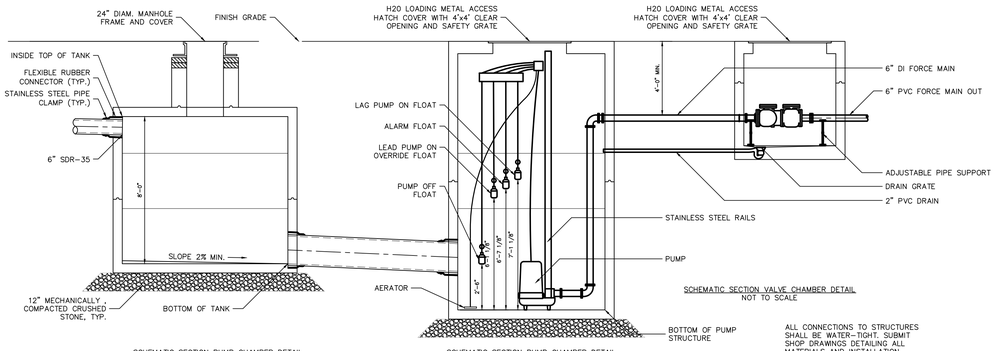

SCHEMATIC SECTION PUMP CHAMBER DETAIL
NOT TO SCALE

SCHEMATIC SECTION PUMP CHAMBER DETAIL
NOT TO SCALE

SCHEMATIC SECTION VALVE CHAMBER DETAIL
NOT TO SCALE

ALL CONNECTIONS TO STRUCTURES SHALL BE WATER-TIGHT. SUBMIT SHOP DRAWINGS DETAILING ALL MATERIALS AND INSTALLATION METHODS PROPOSED TO ACHIEVE WATER-TIGHT CONNECTIONS FOR APPROVAL BY THE ENGINEER.

STRUCTURE NOTES:
1. THE HOLDING TANK, PUMP CHAMBER AND VALVE CHAMBER STRUCTURES SHALL CONFORM TO THE LATEST ASTM SPECIFICATION C478. CONCRETE SHALL HAVE A MINIMUM COMPRESSIVE STRENGTH OF 5,000 POUNDS PER SQUARE INCH AT 28 DAYS. STEEL REINFORCING SHALL BE IN ACCORDANCE WITH ASTM A615-75, GRADE 60, 2-INCH MINIMUM COVER. THE STRUCTURE SHALL BE DESIGNED TO WITHSTAND VERTICAL AND HORIZONTAL SOIL LOADS. INTERNAL BRACING MAY BE USED PROVIDED THAT IT DOES NOT PREVENT OR PROHIBIT INTERNAL FLOW OF SEWERAGE. THE STRUCTURE SHALL HAVE A MINIMUM WALL THICKNESS OF 6 INCHES AND DESIGNED FOR H-20 LOADING. THE STRUCTURE SHALL BE CAST IN A MAXIMUM OF TWO (2) PIECES COMPRISING OF A BASE SECTION AND TOP SECTION. TUNNEL TANKS WILL NOT BE ACCEPTED. THE SHOP DRAWING FOR THE WET WELL SHALL BE STAMPED BY A PROFESSIONAL STRUCTURAL ENGINEER LICENSED IN MASSACHUSETTS.
2. THE HOLDING TANK, PUMP CHAMBER AND VALVE CHAMBER STRUCTURES SHALL BE DESIGNED TO BE NON-BUOYANT. THE CONTRACTOR SHALL PROVIDE BUOYANCY CALCULATIONS WITH SHOP DRAWINGS. CONTRACTOR SHALL PROVIDE ADEQUATE TIE-DOWNS, THICKER STRUCTURE FLOOR/WALLS OR FOUNDATION TO PREVENT BUOYANCY AS NECESSARY.
3. PRECAST UNITS SHALL BE DESIGNED FOR THE FOLLOWING LOADS AND POSSIBLE COMBINATIONS THEREOF:
   3.1. H-20 LOADING, MANHOLE RISER WITH FRAME AND CONES, PLUS THE WEIGHT OF SOIL ABOVE.
   3.2. WEIGHT OF PRECAST CONCRETE STRUCTURE.
   3.3. INITIAL HANDLING AND ERECTION LOADINGS.
4. JOINTS BETWEEN CONCRETE STRUCTURES SHALL BE SEALED WITH KENT SEAL NO. 2 BUTYL RUBBER JOINT SEALANT CONFORMING TO ASTM C990 OR NEOPRENE GASKETS DESIGNED BY MANUFACTURER TO BE WATER TIGHT, INSTALLED IN ACCORDANCE WITH MANUFACTURER'S INSTRUCTIONS. ALL JOINTS AND OPENINGS ARE TO BE WATERTIGHT.
5. THE HOLDING TANK, PUMP CHAMBER AND VALVE CHAMBER STRUCTURES ARE TO BE PROVIDED WITH CO-POLYMER POLYPROPYLENE STEEL REINFORCED MANHOLE STEPS, CONFORMING TO ASTM 2146-68. STEPS SHALL BE INSTALLED 12 INCHES ON CENTER.
6. ACCESS
   6.1. HATCHES
      6.1.1. EXTERIOR ACCESS HATCHES SHALL BE OF ALUMINUM CONSTRUCTION. UNIT SHALL BE SUPPLIED WITH HINGED SAFETY GRATE TO PROVIDE PROTECTION AGAINST FALL THROUGH. HATCH FRAME SHALL BE DESIGNED TO MINIMIZE WATER ENTERING THE WET WELL AND VALVE VAULT. ANGLE TYPE FRAMES WILL NOT BE ACCEPTED. LEAVES SHALL BE MADE FROM DIAMOND PATTERNED, ALUMINUM PLATES AND DESIGNED TO WITHSTAND H20 LOADING. LEAVES SHALL BE EQUIPPED WITH HEAVY-DUTY, CORROSION RESISTANT HINGES; SPRING, PISTON OR TORSION BAR OPERATORS FOR EASY OPERATION; AND AN AUTOMATIC HOLD OPEN ARM WITH RELEASE HANDLE. ALUMINUM SHALL HAVE A MILL FINISH WITH BITUMINOUS COATING APPLIED TO THE EXTERIOR OF THE FRAME. ALL HARDWARE SHALL BE STAINLESS STEEL. FOR SECURITY, THE ACCESS HATCHES SHALL BE EQUIPPED WITH A SLAM LOCK, REMOVABLE KEY WRENCH AND REMOVABLE PLUG AND A STAPLE FOR A PADLOCK. THE WET WELL HATCH FRAME SHALL BE EQUIPPED TO ACCEPT PUMP GUIDES, CABLE HOLDER AND ALL OTHER COMPONENTS REQUIRED FOR A SUBMERSIBLE LIFT RAIL PUMPING STATION.
      6.1.2. ACCESS HATCHES SHALL BE CAST INTO THE WET WELL AND VALVE VAULT COVERS AND SHALL BE INSTALLED IN ACCORDANCE WITH THE MANUFACTURER'S INSTRUCTIONS.
      6.1.3. THE ACCESS HATCH DIMENSIONS SHALL BE AS SHOWN ON THE PLANS.
      6.1.4. HATCHES SHALL BE AS MANUFACTURED BY EAST JORDAN IRON WORKS, BILCO, CAMPBELL FOUNDRY, US FOUNDRY AND MANUFACTURING, OR EQUAL.
7. MANHOLE RISER SECTION, MANHOLE STEPS, FRAMES AND COVERS SHALL BE PER SANITARY SEWER SPECIFICATIONS.
8. ALARM FLOATS SHALL BE PROVIDED WITHIN THE WET WELL. FLOATS SHALL BE CONERY 2900 SERIES OR APPROVED EQUAL. FLOATS SHALL BE INSTALLED AS SHOWN ON THE CONTRACT DRAWINGS.
9. VALVE SUPPORTS SHALL BE INSTALLED BY A QUALIFIED INSTALLER. THE BRACING SHOWN IS MINIMUM RECOMMENDED. STABILITY OF VALVE ASSEMBLY SHALL BE FIELD INSPECTED AND ADDITIONAL SUPPORTS SHALL BE USED AS NECESSARY TO PREVENT SAG AND HORIZONTAL MOVEMENT.
   9.1. ALL SUPPORTS, RODS, BOLTS AND NUTS SHALL BE STAINLESS STEEL.
   9.2. MINIMUM NUMBER OF VERTICAL SUPPORTS = 5
   9.3. MINIMUM NUMBER OF HORIZONTAL SUPPORTS = 4 (ONE ON TOP OF FLANGE, ONE ON BOTTOM OF FLANGE)

PUMPS & RELATED EQUIPMENT NOTES:

1. SEWER EJECTOR PUMPS SHALL BE BARNES OR DEMING CHOPPER PUMPS OR APPROVED EQUAL, SHALL BE EXPLOSION-PROOF, SHALL BE SOLIDS HANDLING WASTEWATER PUMPS WITH A CUTTER BLADE, WITH A THREE-PHASE, 208V, 20 HP MOTOR OPERATING AT 1750 RPM OR APPROVED EQUAL.
2. PUMPS SHALL HAVE RECESSED CAST IRON IMPELLERS AND SERRATED WEAR PLATE FOR SHREDDING OF SOLIDS OR OTHER METHOD, APPROVED BY THE ENGINEER, WHICH WILL PREVENT CLOGGING.
3. PUMPS SHALL BE CAPABLE OF PUMPING WASTEWATER AT 150 GALLONS PER MINUTE AGAINST 50 FEET OF TOTAL DYNAMIC HEAD THROUGH A 6" 4"FORCEMAIN.
4. TWO (2) PUMPS SHALL BE SUPPLIED; PUMPS SHALL BE ON ALTERNATING CYCLES.
5. PUMPS SHALL BE INSTALLED ON STAINLESS STEEL GUIDE RAILS PER MANUFACTURER'S SPECIFICATION.
6. CONTROL PANELS SHALL BE SUPPLIED PER PUMP MANUFACTURER'S SPECIFICATIONS. AT MINIMUM THE FOLLOWING STANDARDS SHALL BE MET:
   6.1. ALL CONTROLS SHALL BE INTRINSICALLY SAFE.
   6.2. CONTROL PANEL ENCLOSURES SHALL BE FIBER GLASS AND SHALL HAVE A NEMA 4X RATING. THE PANEL SHALL INCLUDE A PUMP CIRCUIT BREAKER, CONTROL CIRCUIT BREAKER, ALARM CIRCUIT FUSE, CONTROL CIRCUIT FUSE, I.E.C. RATED MOTOR STARTER WITH 3-POLE AMBIENT COMPENSATED BIMETAL OVERLOAD RELAY, PUMP HAND-OFF-AUTO SWITCH (MOMENTARY IN THE HAND POSITION), ALARM TEST SWITCH, PUMP RUN LIGHTS, SEAL LEAK LIGHTS, ALTERNATOR RELAY (SOLID STATE), OVERRIDE RELAY, CONTROL TRANSFORMER WITH PRIMARY FUSING, TERMINAL BLOCKS, GROUND LUGS, AND ALL NECESSARY WIRING AND BRACKETS. CONTROL PANEL SHALL CONFORM TO PUMP MANUFACTURER SPECIFICATIONS AND SHALL BE ADEQUATE FOR INDOOR AND OUTDOOR USE.
   6.3. THE CONTROL PANEL SHALL BE FITTED WITH AN AMBER COLORED POLYCARBONATE ALARM LIGHT. THE LIGHT SHALL BE APPROXIMATELY 3" HIGH BY 3-1/2" DIAMETER. THE BULB SHALL BE 40 WATT MINIMUM. THE ALARM SHALL HAVE A BRIGHT GLOW AND SHALL FLASH DURING HIGH WATER CONDITIONS. THE ALARM SHALL TURN OFF WHEN HIGH WATER LEVEL DROPS.
   6.4. THE CONTROL PANEL SHALL BE FITTED WITH AN AUDIBLE HORN ALARM THAT SOUNDS DURING HIGH WATER CONDITIONS. THE HORN SHALL TURN OFF WHEN HIGH WATER LEVEL DROPS. A SILENCE SWITCH SHALL BE PROVIDED FOR THE AUDIBLE ALARM.
7. THE CONTRACTOR SHALL PROVIDE AN ELAPSED TIME METER FOR EACH PUMP INSTALLED. METER SHALL RECORD ACTUAL RUNNING TIME OF EACH PUMP. THE METER SHALL HAVE A MAXIMUM READING OF 99,999.99 HOURS.
8. THE CONTRACTOR SHALL PROVIDE AN AUTO DIALER CAPABLE OF PROGRAMING AND CALLING AT LEAST THREE (3) PHONE NUMBERS

INSTALLATION NOTES

1. ALL CONNECTIONS TO STRUCTURES SHALL BE WATER-TIGHT. SUBMIT SHOP DRAWINGS DETAILING ALL MATERIALS AND INSTALLATION METHODS PROPOSED TO ACHIEVE WATER-TIGHT CONNECTIONS FOR APPROVAL BY THE ENGINEER.
2. TESTING, INCLUDING LEAKAGE TESTING, AIR EXFILTRATION TESTING, PRESSURE TESTING AND DEFLECTION TESTING, SHALL BE CONDUCTED IN ACCORDANCE WITH THE SPECIFICATIONS.
3. CLEAN AND FLUSH ALL STRUCTURES AND PIPING AFTER WORK COMPLETE.

5 SEWER PUMP STATION PLAN AND SECTION
N.T.S.

Date	Description	No.

Revisions

COMMONWEALTH OF MASSACHUSETTS
FRANK HOLMES
CIVIL
No. 40203
REGISTERED PROFESSIONAL ENGINEER

LANGAN
Langan Engineering and Environmental Services, Inc.
100 Cambridge Street, Suite 1310
Boston, MA 02114
T: 617.824.9100 F: 617.824.9101 www.langan.com

Project
237 PLEASANT STREET CONCEPT PLANS
FRANKLIN
NORFOLK COUNTY MASSACHUSETTS

Drawing Title
UTILITY DETAILS II

Project No. 151019602
Date 09/10/2022
Drawn By
Checked By
Drawing No. CU502

© 2022 Langan

LEGEND

SYMBOL	KEY	TITLE
	IP	PROPOSED INLET PROTECTION
	RR	RIP-RAP PROTECTION
	CE	CONSTRUCTION ENTRANCE
		LIMIT OF DISTURBANCE
	FT	COMPOST FILTER TUBE & SILT FENCE
	SF	SILT FENCE
		INFILTRATION BASIN PROTECTION AREA
		STOCKPILE AREA
		CONSTRUCTION FENCING
		FUTURE BUILDING FOOTPRINT

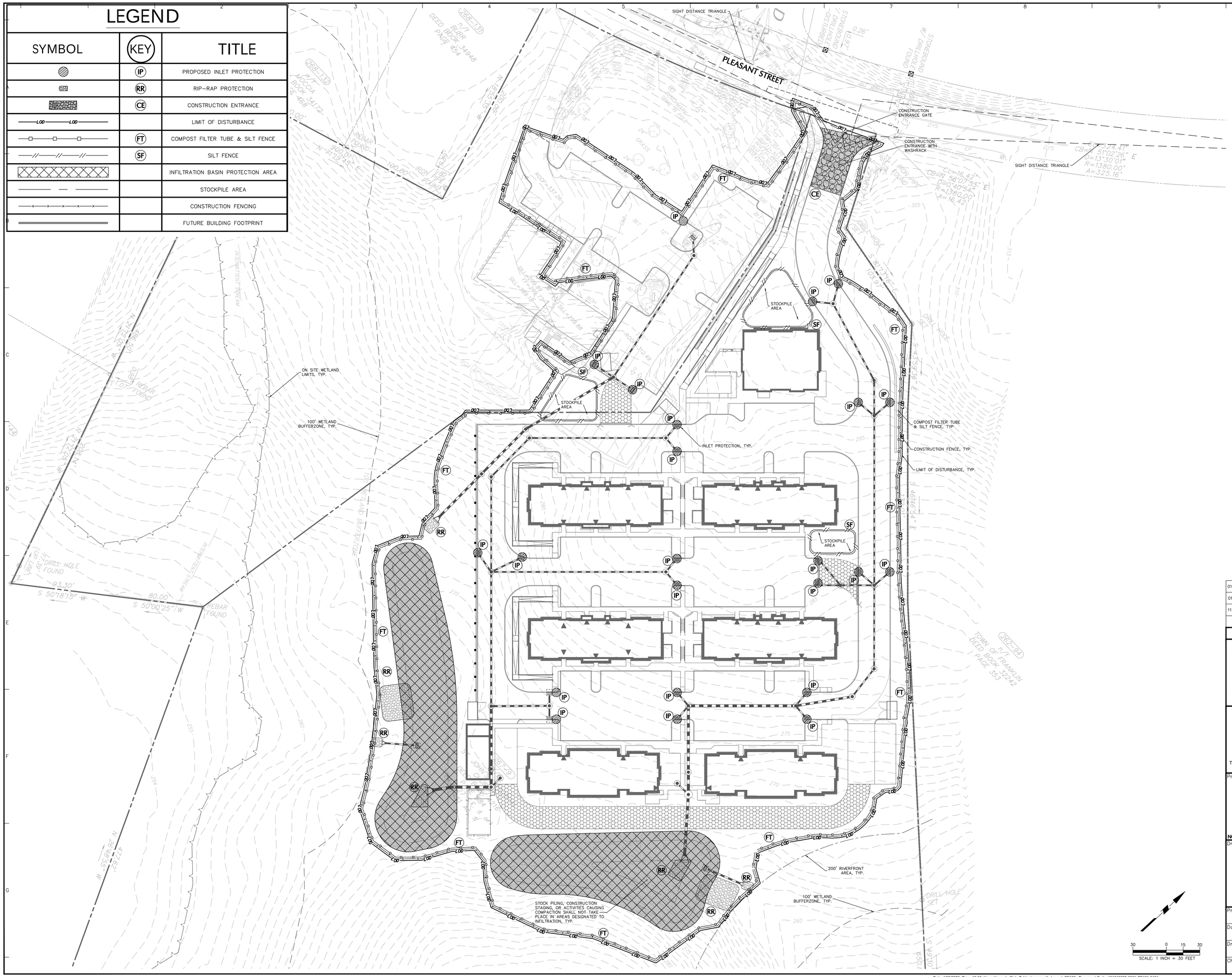

SCALE: 1 INCH = 30 FEET

Date	Description	No.
01/26/2023	PEER REVIEW COMMENTS	3
01/11/2023	PEER REVIEW COMMENTS	2
11/23/2022	STORMWATER REPORT	1

Revisions

COMMONWEALTH OF MASSACHUSETTS
FRANK HOLMES
CIVIL
No. 40203
REGISTERED PROFESSIONAL ENGINEER

LANGAN
Langan Engineering and Environmental Services, Inc.
100 Cambridge Street, Suite 1310
Boston, MA 02114
T: 617.824.9100 F: 617.824.9101 www.langan.com

Project
237 PLEASANT STREET CONCEPT PLANS
FRANKLIN
NORFOLK COUNTY MASSACHUSETTS

Drawing Title
SOIL EROSION & SEDIMENT CONTROL PLAN

Project No. 151019602
Date 09/10/2022
Drawn By KH
Checked By FH
Drawing No. CE100

© 2022 Langan

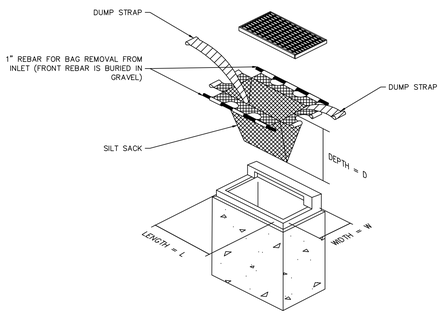

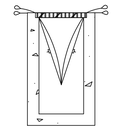

INSTALLATION DETAIL

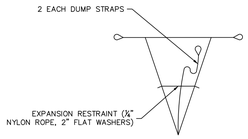

BAG DETAIL

1 SILT SACK INLET PROTECTION

N.T.S.

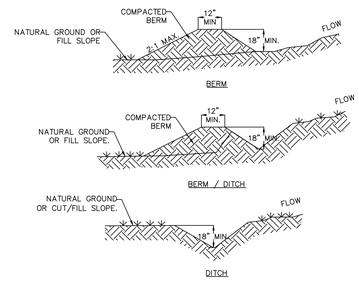

NOTES:
1. POSITIVE GRADE MUST BE PROVIDED TO ASSURE DRAINAGE. 2:1 MAX. SIDE SLOPE. IF SLOPE EXCEEDS 2% OR CHANNEL IS CONSTRUCTED IN FILL, PROVIDE CHANNEL LINER PER DETAIL, EC 5, TRY NOT TO EXCEED 5% (HIGH RUNOFF VELOCITIES RESULT). MAXIMUM DRAINAGE AREA IS 5.00 ACRES WITHOUT SUPPORTING CALCULATIONS FOR PERMANENT CHANNEL. DIVERSIONS AT THE TOPS OF SLOPES MUST EMPTY INTO AN APPROVED SLOPE DRAIN (SEE DETAILS). THE BERM/DITCH IS THE MOST COMMONLY USED DIVERSION.
2. MACHINE COMPACTING OF ALL FILL IS REQUIRED/
3. DIVERSIONS SUFFICIENT TO DIRECT ALL SEDIMENT-LADEN STORMWATER INTO SEDIMENT CONTROL DEVICE MUST BE INSTALLED PRIOR TO CLEARING AND GRUBBING OF AREA (OR IN CONJUNCTION WITH THIS OPERATION IF SEDIMENT CONTROLS AND DIVERSIONS ARE INSTALLED AT EACH CRITICAL POINT AS INDICATED).
4. DIVERSIONS SHOULD BE LOCATED AS SHOWN ON THE PLANS AND TO MINIMIZE DAMAGES BY CONSTRUCTION OPERATIONS.
5. DIVERSIONS SHOULD BE SEEDED AND LINED WITH STRAW MAT IF THEY ARE TO REMAIN IN PLACE OVER 14 DAYS.
6. CHECK DIVERSIONS AFTER EACH RAIN, AND ONCE PER SEVEN CALENDAR DAYS OR MORE FREQUENTLY IF REQUIRED BY REGULATORY AGENCY. REPAIR AS NEEDED TO MAINTAIN FUNCTION.

2 TEMPORARY DIVERSION

N.T.S.

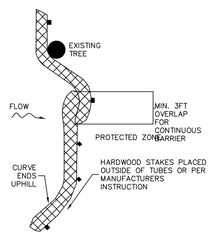

PLAN VIEW

PLACE TUBE ALONG CONTOURS AND PERPENDICULAR TO FLOW

PLACE AS CLOSE TO LIMIT OF SOIL DISTURBANCE AS POSSIBLE

ADJUST LOCATION AS REQUIRED FOR OPTIMUM EFFECTIVENESS DO NOT INSTALL IN WATERWAYS

PLACE STAKES AS NEEDED TO SECURE TUBES IN PLACE

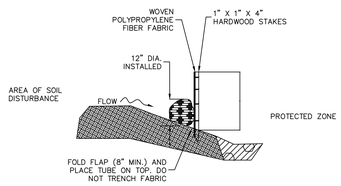

SECTION

3 COMPOST FILTER TUBE & SILT FENCE

N.T.S.

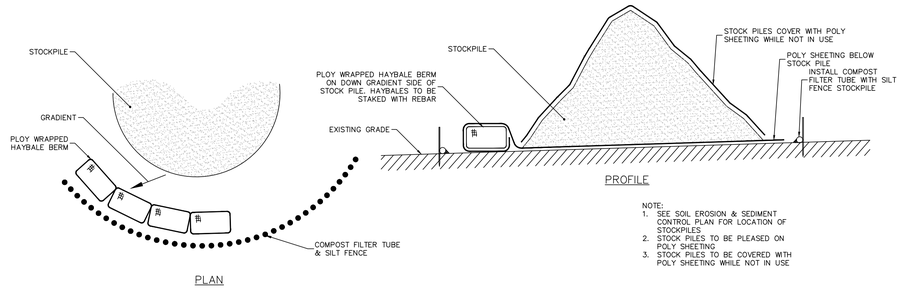

PLAN

PROFILE

NOTE:
1. SEE SOIL EROSION & SEDIMENT CONTROL PLAN FOR LOCATION OF STOCKPILES.
2. STOCK PILES TO BE PLEASED ON POLY SHEETING.
3. STOCK PILES TO BE COVERED WITH POLY SHEETING WHILE NOT IN USE

4 TEMPORARY STOCKPILE

N.T.S.

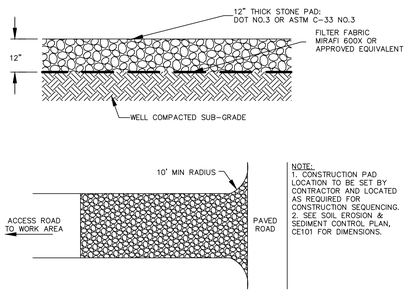

NOTE:
1. CONSTRUCTION PAD LOCATION TO BE SET BY CONTRACTOR AND LOCATED AS REQUIRED FOR CONSTRUCTION SEQUENCING.
2. SEE SOIL EROSION & SEDIMENT CONTROL PLAN, CE101 FOR DIMENSIONS.

5 STABILIZED CONSTRUCTION ENTRANCE

N.T.S.

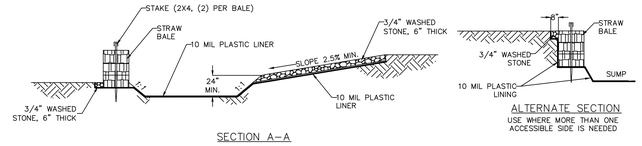

SECTION A-A

ALTERNATE SECTION
USE WHERE MORE THAN ONE ACCESSIBLE SIDE IS NEEDED

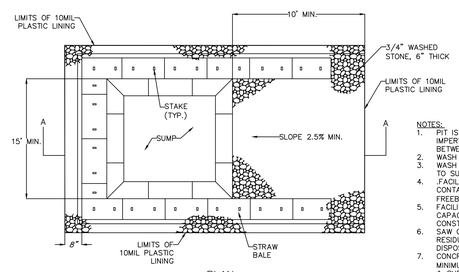

PLAN

WASHOUT SIGN

NOTES:
1. PIT IS SPECIFICALLY DESIGNATED, DIKED AND IMPERVIOUS CONTAINMENT TO PREVENT CONTACT BETWEEN CONCRETE.
2. WASH AND STORMWATER.
3. WASH WATER SHALL NOT BE ALLOWED TO FLOW TO SURFACE WATER.
4. FACILITY MUST HOLD SUFFICIENT VOLUME TO CONTAIN CONCRETE WASTE WITH A MINIMUM FREEBOARD OF 12".
5. FACILITY SHALL NOT BE FILLED BEYOND 95% CAPACITY UNLESS A NEW FACILITY IS CONSTRUCTED.
6. SAW CUT PORTLAND CEMENT CONCRETE, RESIDUE FROM SAWCUT & GRINDING TO BE DISPOSED OF IN THE PIT.
7. CONCRETE WASHOUTS SHALL BE LOCATED A MINIMUM OF 100' FROM DRAINAGE WAYS, INLETS, & SURFACE WATERS.
8. MANUFACTURING CONCRETE WASHOUT DEVICES MAY BE USED IF REMOVED FROM THE SITE WHEN 95% FULL CAPACITY.

6 CONCRETE WASHOUT AREA

N.T.S.

Date	Description	No.

Revisions

COMMONWEALTH OF MASSACHUSETTS
FRANK HOLMES
CIVIL
No. 40203
REGISTERED PROFESSIONAL ENGINEER

LANGAN
Langan Engineering and Environmental Services, Inc.
100 Cambridge Street, Suite 1310
Boston, MA 02114
T: 617.824.9100 F: 617.824.9101 www.langan.com

Project
237 PLEASANT STREET CONCEPT PLANS
FRANKLIN
NORFOLK COUNTY MASSACHUSETTS

Drawing Title
SOIL EROSION & SEDIMENT CONTROL DETAILS I

Project No.	Drawing No.
151019602	CE501
Date 09/10/2022	
Drawn By	
Checked By	

© 2022 Langan

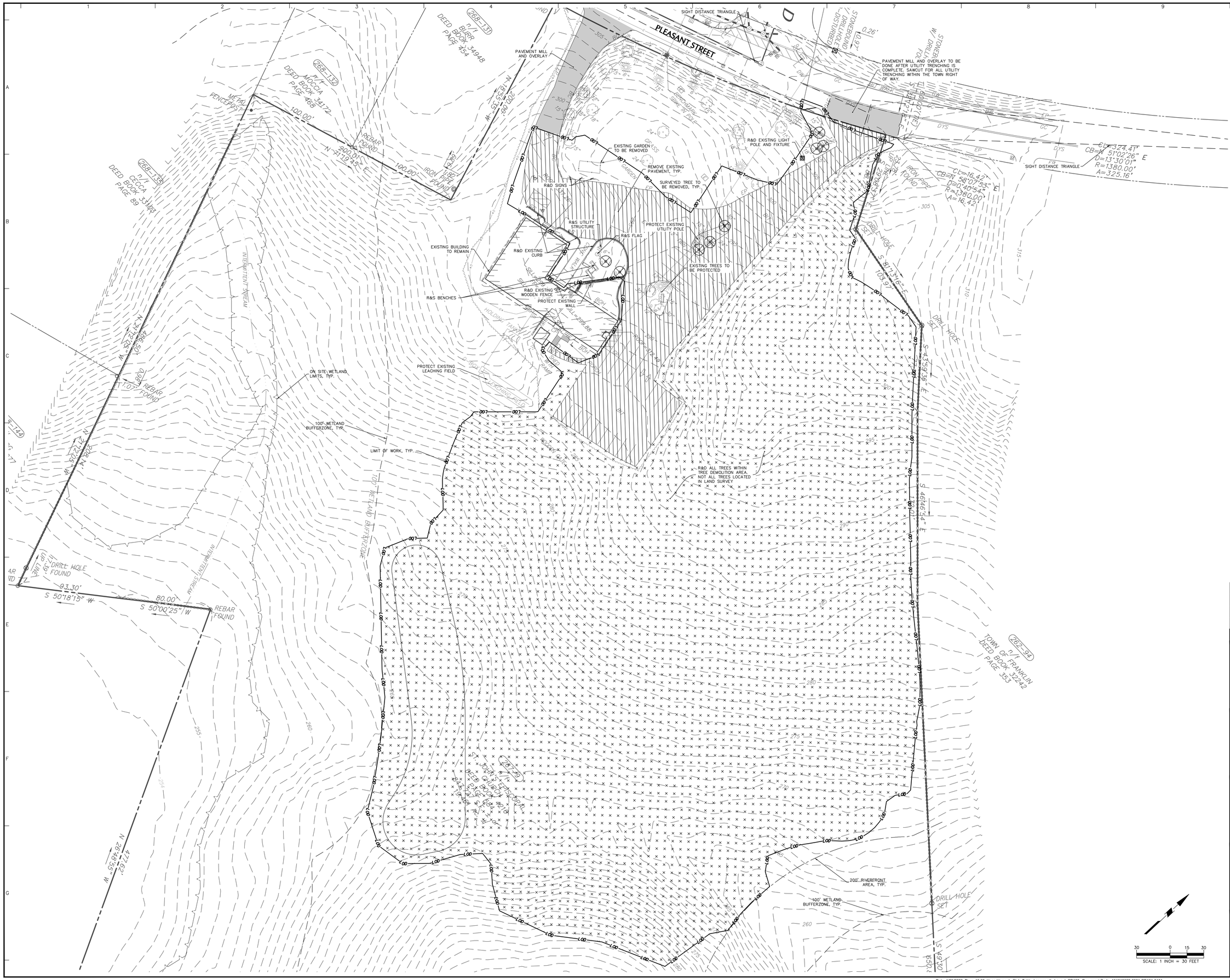

Date	Description	No.
01/26/2023	PEER REVIEW COMMENTS	3
01/11/2023	PEER REVIEW COMMENTS	2
11/23/2022	STORMWATER REPORT	1

Revisions

COMMONWEALTH OF MASSACHUSETTS
FRANK HOLMES
CIVIL
No. 40203
REGISTERED PROFESSIONAL ENGINEER

LANGAN
Langan Engineering and Environmental Services, Inc.
100 Cambridge Street, Suite 1310
Boston, MA 02114
T: 617.824.9100 F: 617.824.9101 www.langan.com

Project

237 PLEASANT STREET CONCEPT PLANS

FRANKLIN
NORFOLK COUNTY MASSACHUSETTS

Drawing Title

DEMOLITION PLAN

Project No. 151019602
Date 09/10/2022
Drawing No. CD100
Drawn By KH
Checked By FH

30 0 15 30
SCALE: 1 INCH = 30 FEET

© 2022 Langan

Date	Description	No.
11/23/2022	STORMWATER REPORT	1

Revisions

COMMONWEALTH OF MASSACHUSETTS
FRANK HOLMES
CIVIL
No. 40203
REGISTERED PROFESSIONAL ENGINEER

LANGAN
Langan Engineering and Environmental Services, Inc.
100 Cambridge Street, Suite 1310
Boston, MA 02114
T: 617.824.9100 F: 617.824.9101 www.langan.com

Project

237 PLEASANT STREET CONCEPT PLANS

FRANKLIN
NORFOLK COUNTY MASSACHUSETTS

Drawing Title

TURNING MOVEMENT PLAN

Project No.	Drawing No.
151019602	TM100
Date: 09/10/2022	
Drawn By: KH	
Checked By: FH	

© 2022 Langan

SITE LIGHTING SCHEDULE

SYMBOL	KEY	QTY.	FIXTURE MANUFACTURER	FIXTURE MODEL	FIXTURE DESCRIPTION	FIXTURE MOUNTING HEIGHT	LAMP	OPTICS	COLOR TEMPERATURE	LUMENS	LLF	FIXTURE CATALOGUE NO.	POLE / ARM MANUFACTURER	ARM / POLE DESCRIPTION	POLE LENGTH	ARM / POLE CATALOGUE NO.
	A	13	SELUX	OURAY 500	SINGLE POLE-MOUNTED AREA FIXTURE; COLOR: SILVER	20'-0"	89W LED	TYPE III W/ HOUSE SIDE SHIELD	2700K	6,078	0.90	U5-R3-S1-XX-5G700-27 -XX-XX-UNV-HS-SV	LYTE POLES	ROUND TAPERED ALUMINUM POLE COLOR: SILVER	20'-0"	405-7015-20 -AB-D1-SL
	B	25	SELUX	OURAY 500	SINGLE POLE-MOUNTED AREA FIXTURE; COLOR: SILVER	20'-0"	89W LED	TYPE II W/ HOUSE SIDE SHIELD	2700K	6,072	0.90	U5-R2-S1-XX-5G700-27 -XX-XX-UNV-HS-SV	LYTE POLES	ROUND TAPERED ALUMINUM POLE COLOR: SILVER	20'-0"	405-7015-20 -AB-D1-SL
	B1	1	SELUX	OURAY 500	TWIN POLE-MOUNTED AREA FIXTURE; COLOR: SILVER	20'-0"	89W LED	TYPE II W/ HOUSE SIDE SHIELD	2700K	6,072	0.90	U5-R2-S1-XX-5G700-27 -XX-XX-UNV-HS-SV	LYTE POLES	ROUND TAPERED ALUMINUM POLE COLOR: SILVER	20'-0"	405-7015-20 -AB-D1-SL
	C	10	SELUX	SATURN CUTOFF LED	SINGLE POLE-MOUNTED AREA FIXTURE; COLOR: SILVER	12'-0"	39W LED	TYPE II W/ HOUSE SIDE SHIELD	2700K	3,036	0.90	SACL-R2-1-5G450-27 -XX-XX-UNV-SV	SELUX	STEPPED STEEL POLE COLOR: SILVER	12'-0"	S635
	D	38	SELUX	INULA BOLLARD	LIGHT BOLLARD; COLOR: SILVER	42"	14W LED	ASYMMETRIC	2700K	1,083	0.90	IBL-3.5-20180-AM-XX-UNV	N/A	N/A	N/A	N/A

NOTES:
1. REFER TO ELECTRICAL DRAWINGS FOR SITE LIGHTING VOLTAGES.

TOWN OF FRANKLIN, MA- ZONING BYLAW REGULATIONS COMPLIANCE CHART

REGULATION SECTION	REQUIRED / PERMITTED	PROVIDED / PROPOSED	COMPLIANCE
195-17.37	OUTDOOR LIGHTING SHALL BE CONSIDERED IN THE LANDSCAPING PLAN AND REQUIRES THE SUBMISSION OF A PHOTOMETRIC LIGHTING PLAN. CUTOFF SHIELDS SHALL BE USED TO MINIMIZE GLARE AND LIGHT SPILLOVER ONTO ABUTTING PROPERTY. ORNAMENTAL STREETLIGHTS, 16 FEET MAXIMUM HEIGHT ON MINOR ROADS AND 24 FEET MAXIMUM HEIGHT ON MAJOR ROADS;	HOUSE SIDE SHIELDS HAVE BEEN PROVIDED TO MINIMIZE LIGHT IMPACT UPON ABUTTING PROPERTIES. FIXTURES ALONG ROADS ARE PROVIDED AT 13 FEET.	COMPLIES
195-17.37	ALL ARTIFICIAL LIGHTING USED TO ILLUMINATE RESIDENTIAL, COMMERCIAL, AND INDUSTRIAL PARKING LOT, LOADING BAY OR DRIVEWAY SHALL HAVE UNDERGROUND WIRING AND SHALL BE SO ARRANGED THAT ALL DIRECT RAYS FROM SUCH LIGHTING FALLS ENTIRELY WITHIN THE PARKING, LOADING OR DRIVEWAY AREA, AND SHALL BE SHIELDED OR RECESSED SO AS NOT TO SHINE UPON ABUTTING PROPERTIES;	HOUSE SIDE SHIELDS HAVE BEEN PROVIDED TO MINIMIZE LIGHT IMPACT UPON ABUTTING PROPERTIES.	COMPLIES TO EXTENT PRACTICABLE

STATISTICS

DESCRIPTION	AVG.	MAX.	MIN.	MAX./MIN.	AVG./MIN.
CAR PARKING	1.8 FC	3.8 FC	0.5 FC	7.6:1	3.6:1
CHURCH CAR PARKING	2.0 FC	3.8 FC	0.6 FC	5.4:1	2.8:1
DRIVEWAY 1	1.9 FC	4.1 FC	0.7 FC	5.9:1	2.7:1
DRIVEWAY 2	2.2 FC	3.9 FC	0.7 FC	5.6:1	3.2:1
PEDESTRIAN	2.4 FC	9.7 FC	0.5 FC	19.4:1	4.8:1

NOTE: LIGHT PHOTOMETRY AND CALCULATIONS FOR EXISTING AND ADJACENT LIGHTING TO REMAIN ARE NOT INCLUDED IN THE ABOVE STATISTICS.

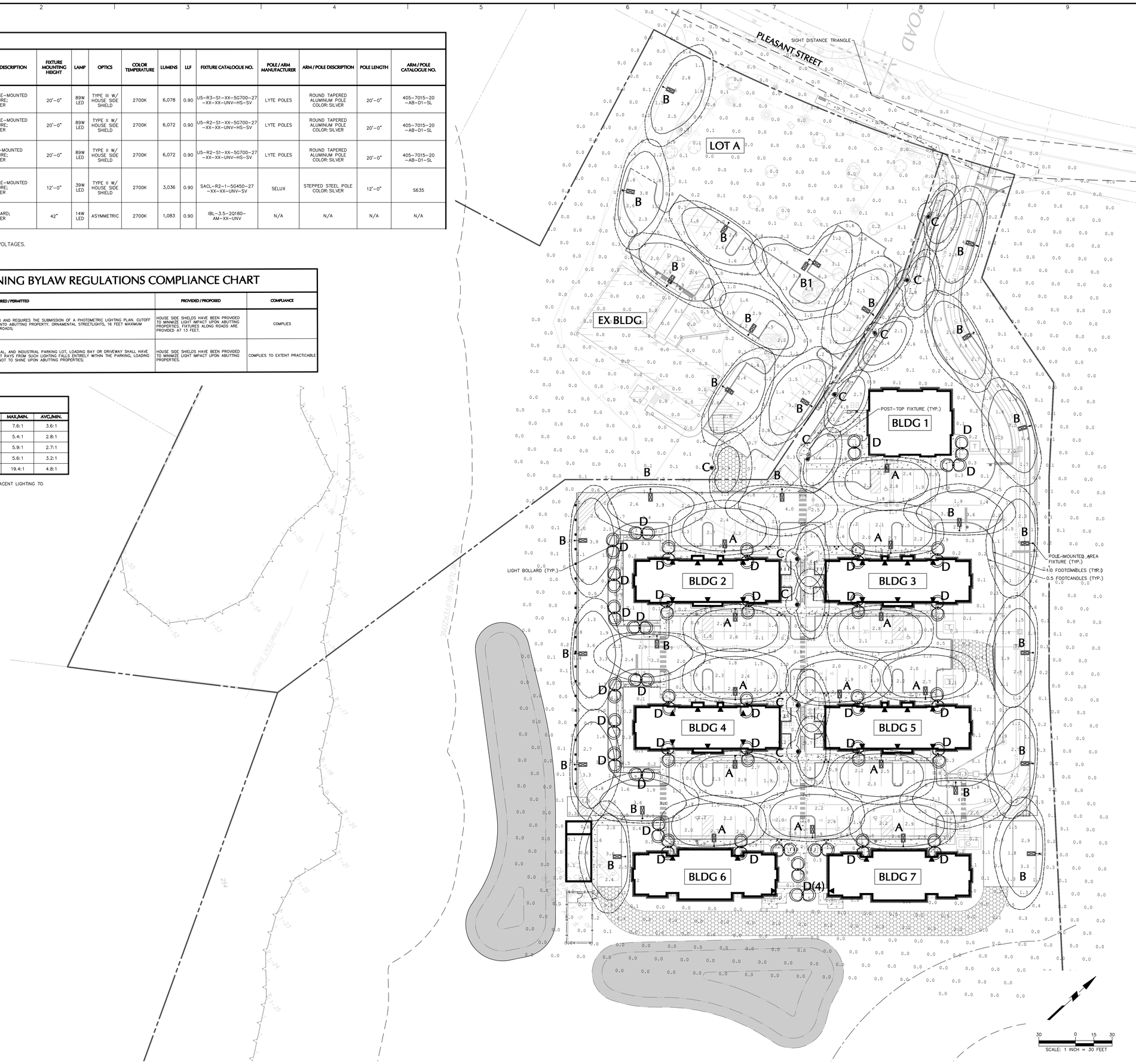

Date	Description	No.
01/26/2023	PEER REVIEW COMMENTS	3
01/11/2023	PEER REVIEW COMMENTS	2
11/23/2022	STORMWATER REPORT	1

Revisions

Signature Date

LANGAN
Langan Engineering and Environmental Services, Inc.
100 Cambridge Street, Suite 1310
Boston, MA 02114
T: 617.824.9100 F: 617.824.9101 www.langan.com

Project
237 PLEASANT STREET CONCEPT PLANS
FRANKLIN
NORFOLK COUNTY MASSACHUSETTS

Drawing Title
LIGHTING PLAN

Project No. 151019602
Date 09/10/2022
Drawn By AS
Checked By MH
Drawing No. LL100

© 2022 Langan

LIGHTING NOTES:

1. POINT-BY-POINT CALCULATIONS PROVIDED WITHIN HAVE BEEN PREPARED IN ACCORDANCE TO IESNA STANDARDS AND IN CONSIDERATION OF THE VARIABLES WITHIN THESE NOTES AND SITE LIGHTING SCHEDULE. THE VALUES SHOWN ON THE PLANS ARE NOT AN INDICATION OF THE INITIAL LIGHT INTENSITIES OF THE LAMPS. THESE VALUES ARE AN APPROXIMATION OF THE MAINTAINED INTENSITIES DELIVERED TO THE GROUND PLANE USING INDUSTRY ACCEPTABLE LIGHT LOSS FACTORS (LLF) WHICH COVER LAMP DEGRADATION AND NATURAL BUILDUP ON THE FIXTURE LENS. THE LIGHTING PLAN IS DESIGNED WITH AN INDUSTRY ACCEPTABLE LLF TO ENSURE ADEQUATE LIGHT INTENSITIES OVER YEARS OF USE AND WEAR. MINOR VARIATIONS IN TOPOGRAPHY, PHYSICAL OBSTRUCTIONS, AMBIENT OR ADJACENT LIGHT SOURCES AND/OR OTHER POTENTIAL IMPACTS HAVE NOT BEEN INCLUDED IN THESE CALCULATIONS. THEREFORE, AS-BUILT LIGHT INTENSITIES MAY VARY, IN EITHER DIRECTION, FROM WHAT IS EXPLICITLY PORTRAYED WITHIN THESE DRAWINGS.
2. PROVIDE A CONCRETE BASE FOR EACH LIGHT POLE AT THE LOCATIONS INDICATED ON THE CONSTRUCTION DRAWINGS AND IN ACCORDANCE WITH PROJECT PLANS AND SPECIFICATIONS RELATING DIRECTLY TO CAST-IN-PLACE CONCRETE.
3. CONTRACTOR TO COORDINATE INSTALLATION OF UNDERGROUND FEEDER CABLE FOR EXTERIOR LIGHTING WITH EXISTING AND PROPOSED UTILITIES, SITE DRAINAGE SYSTEMS, AND PAVING. CONTRACTOR SHALL PROMPTLY NOTIFY THE OWNER'S REPRESENTATIVE SHOULD ANY UTILITIES, NOT SHOWN ON THE PLANS, BE FOUND DURING EXCAVATIONS.
4. CONTRACTOR TO OPERATE EACH LUMINAIRE AFTER INSTALLATION AND CONNECTION. INSPECT FOR IMPROPER CONNECTIONS AND OPERATION.
5. AIM AND ADJUST ALL LUMINAIRES TO PROVIDE ILLUMINATION LEVELS AND DISTRIBUTION AS INDICATED ON THE CONSTRUCTION DRAWINGS OR AS DIRECTED BY THE LANDSCAPE ARCHITECT AND/OR OWNER.
6. CONTRACTOR TO COORDINATE INSTALLATION OF ALL THE WALL MOUNTED FIXTURES AND ELECTRICAL CONNECTIONS TO SITE STRUCTURE(S) WITH BUILDING MEP, ARCHITECT, AND/OR OWNER.
7. INSTALLATION OF ALL LIGHTING FIXTURES, POLES, FOOTINGS, AND FEEDER CABLE TO BE COORDINATED WITH ALL SITE WORK TRADES TO AVOID CONFLICT WITH FINISHED AND PROPOSED WORK.
8. POINT SPACING ON PLACE OF CALCULATION IS 10 FT. LEFT TO RIGHT AND 10 FT. TOP TO BOTTOM.
9. POINT-BY-POINT CALCULATIONS PROVIDED WITHIN HAVE BEEN PREPARED IN ACCORDANCE TO IESNA STANDARDS AND IN CONSIDERATION OF THE VARIABLES WITHIN THESE NOTES AND SITE LIGHTING SCHEDULE. THE VALUES REPRESENTED ON THE PLANS PRESENT AN APPROXIMATION OF THE MAINTAINED LIGHT LEVELS DELIVERED TO THE GROUND PLANE. MINOR VARIATIONS IN TOPOGRAPHY, PHYSICAL OBSTRUCTIONS, LAMP DEGRADATION, AMBIENT OR ADJACENT LIGHT SOURCES AND/OR OTHER POTENTIAL IMPACTS HAVE NOT BEEN INCLUDED IN THESE CALCULATIONS. GIVEN THIS, AS-BUILT VALUES MAY VARY, GREATER THAN OR LESS THAN, WHAT IS EXPLICITLY PORTRAYED WITHIN THESE DRAWINGS
10. ALL SITE LIGHTING RELATED WORK AND MATERIALS SHALL COMPLY WITH CITY, COUNTY, AND OTHER APPLICABLE GOVERNING AUTHORITY REQUIREMENTS.
11. SITE ELECTRICAL CONTRACTOR TO COORDINATE LOCATION OF EASEMENTS, UNDERGROUND UTILITIES AND DRAINAGE BEFORE DRILLING POLE BASES.
12. SITE ELECTRICAL CONTRACTOR TO COORDINATE POWER SOURCE WITH LIGHT FIXTURES TO INSURE ALL SITE LIGHTING IS OPERATING EFFECTIVELY, EFFICIENTLY AND SAFELY.
13. SITE ELECTRICAL CONTRACTOR SHALL CONFIRM THAT LIGHT FIXTURES MATCH SPECIFICATIONS ON THE PLANS.
14. REFER TO ELECTRIFICATION PLAN FOR PROVIDING ADEQUATE POWER FOR SITE LIGHTING.
15. SITE ELECTRICAL CONTRACTOR SHALL EXAMINE AND VERIFY THAT SOIL CONDITIONS ARE SUITABLE TO SUPPORT LOADS EXERTED UPON THE FOUNDATIONS DURING EXCAVATION. CONTRACTOR SHALL NOTIFY ENGINEER OF ANY UNSATISFACTORY CONDITIONS.
16. POLE FOUNDATIONS SHALL NOT BE POURED IF FREE STANDING WATER IS PRESENT IN EXCAVATED AREA.
17. ELECTRICIAN AND INSTALLATION OF WALL MOUNTED FIXTURES SHALL BE COORDINATED WITH THE ARCHITECTURAL, STRUCTURAL, AND SITE DRAWINGS FOR SAFETY AND TO PROVEN EXPOSED WIRING.
18. LIGHTING SUBSTITUTION REQUIREMENTS:
    ALL LIGHTING SUBSTITUTIONS MUST BE MADE WITHIN 14 DAYS PRIOR TO THE BID DATE TO PROVIDE AMPLE TIME FOR REVIEW AND TO ISSUE AN ADDENDUM INCORPORATING THE SUBSTITUTION WITH THE FOLLOWING REQUIREMENTS:
    A. ANY SUBSTITUTION TO LIGHTING FIXTURES, POLES, ETC. MUST BE APPROVED BY THE OWNER, ENGINEER AND TENANTS. ANY COST ASSOCIATED WITH REVIEW AND/OR APPROVAL OF THE SUBSTITUTIONS SHALL BE ENTIRELY BORNE BY THE CONTRACTOR
    B. COMPUTER PREPARED PHOTOMETRIC LAYOUT OF THE PROPOSED LIGHTED AREA WHICH INDICATES, BY ISOFOOTCANDLE, THE SYSTEM'S PERFORMANCE.
    C. A PHOTOMETRIC REPORT FROM A NATIONAL INDEPENDENT TESTING LABORATORY WITH REPORT NUMBER, DATE, FIXTURE CATALOG NUMBER, LUMINAIRE AND LAMP SPECIFICATIONS; IES CALCULATIONS, CANDLEPOWER TABULATIONS, ZONE LUMEN SUMMARY, ISOLUX PLOT, AND CATALOGUE CUTS. CATALOGUE CUTS MUST IDENTIFY, BUT NOT LIMITED TO, OPTICS, LAMP TYPE, DISTRIBUTION TYPE, REFLECTOR, LENS, BALLASTS, WATTAGE, VOLTAGE, FINISH AND HOUSING DESCRIPTION.
    D. POLE MANUFACTURER AASHTO CALCULATIONS INDICATING THE POLE AND ANCHOR BOLTS BEING SUBMITTED ARE CAPABLE OF SUPPORTING THE POLE AND FIXTURE SYSTEMS BEING UTILIZED IN ACCORDANCE WITH THE CONTRACT DOCUMENTS.
    E. THE UNDERWRITERS LABORATORY LISTING AND FILE NUMBER FOR THE SPECIFIC FIXTURE(S) TO BE UTILIZED.
    F. A COLOR PHOTOGRAPH THAT CLEARLY SHOWS THE REPLACEMENT FIXTURE POLE MOUNTED, THE FIXTURE'S COLOR, FINISH, AND PHYSICAL CHARACTERISTICS.

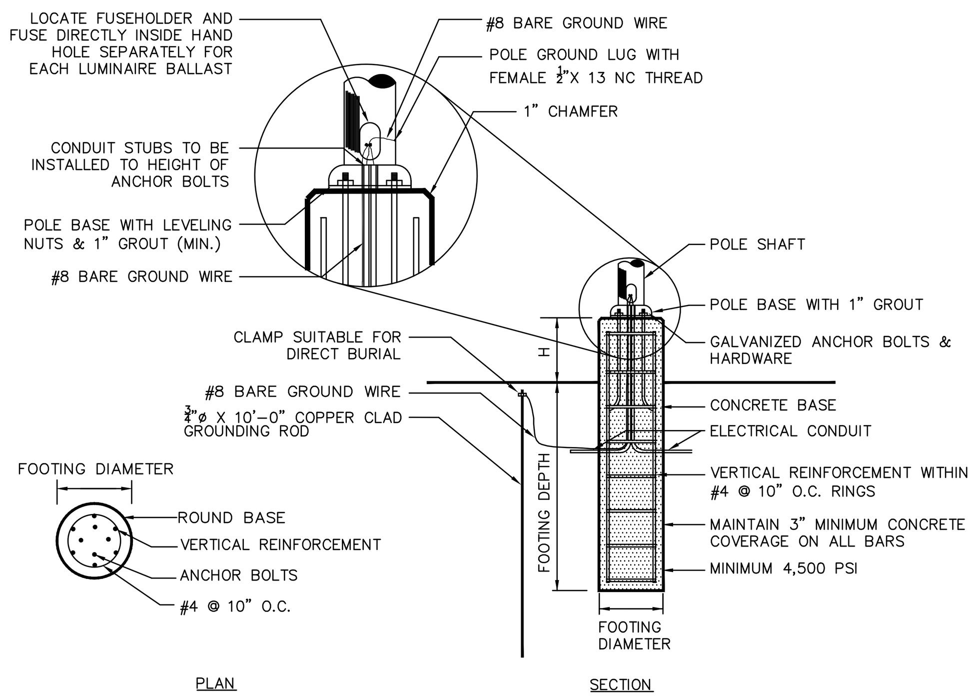

FIXTURE KEY	MOUNTING HEIGHT	FOOTING DEPTH	FOOTING DIAMETER	VERTICAL REINFORCEMENT	'H'
A-C	<=20'-0"	7'-0"	1'-6"	6#5 BARS	FLUSH WITH GRADE

NOTES:

1. SHAFT CAP, ARMS, BASE FLANGE, ANCHOR BOLTS, LEVELING NUTS, CONNECTION HARDWARE, BOLT COVERS, HANDHOLE COVER, AND BOLT CIRCLE TEMPLATE SHALL BE FURNISHED BY POLE MANUFACTURER.
2. EACH STANDARD TO BE PROTECTED AGAINST LIGHTNING WITH AN INTERCONNECTED GROUND ROD. THIS ROD SHALL BE BONDED PER SECTION NUMBER 250-86, N.E.C.
3. CONTRACTOR TO ENSURE CONCRETE POLE BASES ARE POURED / PLACED ABSOLUTELY VERTICAL & LEVEL.
4. POLE BASE SHALL BE ONE CONTINUOUS POUR. EXPOSED PORTION OF BASE SHALL BE HAND-RUBBED SMOOTH.
5. CONTRACTOR TO COMPACT SUBGRADE AROUND POLE BASE PER EARTHWORK SPECIFICATIONS / GEOTECH REPORT.
6. THE INFORMATION ILLUSTRATED IN THE LIGHT POLE FOUNDATION DETAIL HAS BEEN PROVIDED FOR GENERAL REFERENCE AND PRELIMINARY COST ESTIMATE PURPOSES. LIGHT POLE FOUNDATIONS SHOULD BE DESIGNED AND DETAILED BY A LICENSED STRUCTURAL ENGINEER BASED ON EXISTING SOIL CONDITIONS, LOCAL DESIGN STANDARDS AND MANUFACTURERS RECOMMENDATIONS.

1 POLE MOUNTED FIXTURE FOOTING

NTS

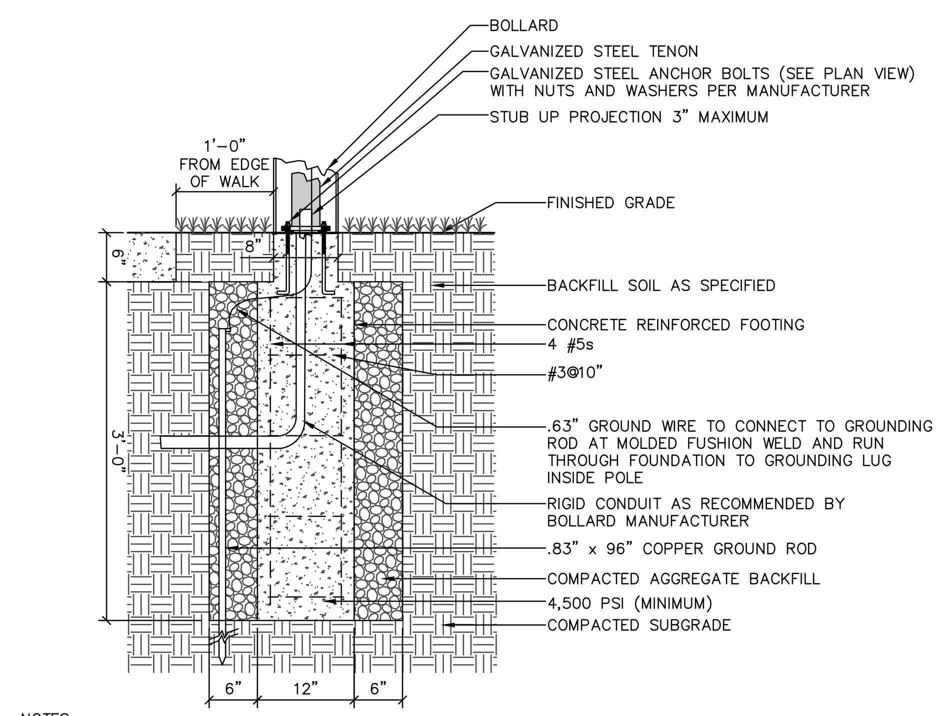

NOTES:

1. FOOTING SHOP DRAWINGS SIGNED AND SEALED BY A CONNECTICUT LICENSED STRUCTURAL ENGINEER TO BE SUBMITTED TO PROJECT LANDSCAPE ARCHITECT PRIOR TO INSTALLATION.

2 LIGHT BOLLARD FOOTING

NTS

Date: ______ Customer: ______

Project: ______

Type: ______ Qty: ______

selux

Inula Bollard LED

Order Code: IBL - ___ - ___ - ___ - ___ - ___ - ___

IBL	Series	IBL Inula Bollard LED							
___	Height	1.5 1.5'. (consult factory)	2 2' (consult factory)	2.5 2.5'	3 3'	3.5 3.5'	4 4'		
___	Light Engine	1Q[1] 7.6W/577lm	2Q90 14.1W/1156lm	2Q90MU 14.1W/854lm (max uniformity)	2Q180 14.1W/1156lm	3Q 20.5W/1689lm	4QS 27.2W/2246lm	4QD 27.2W/2246lm	*Based on 5000K CCT. [1]Not available with EM.
___	CCT	AM[2] Amber	27[2]* 2700K	30[2] 3000K	35* 4000K	40 4000K	50* 5000K		[2]IDA Approved. *Consult factory
___	Finish	WH White	BK Black	BL Semi-Matte Black	BZ Bronze	SV Silver	SP Specify Premium Color		
___	Voltage	UNV 120-277V	120 120V	208 208V	240 240V	277 240V	347[3] 347V	480[3] 480V	*50 or 60 Hertz. [3]Requires step down transformer, 60 Hertz Only.
___	Options	DM Dimming (0-10V)	HL30[6,9,11] Hi-Lo Switching 100-30%	REC[4,5,15] GFCI Receptacle with weather-proof cover	REC2[4,5,15] GFCI Receptacle with padlockable in-use cover	REC3[4,5,15] USB & Duplex Receptacle with weather-proof cover	REC4[4,5,15] USB & Duplex Receptacle with weatherproof padlockable in-use cover	EM[7,8,12] Emergency Battery Pack -20C	[4]120V Only. [5]Not available in 2.5' height. [6]Only available with 120V,240V or 277V. [7]Not available with IQ. [8]120V or 277V only. [9]Not available with DM Option. [10]Not available at 480V. [11]Not available with EM option. [12]Not available with PC or LP option. [13]Not available with HL30 or HP options. [14]For 1Q, 2Qxx and 3Q please consult factory. [15]See page 6 for details.
		PC[10,11] Photocell	LP[11,13,14] Lower Power Version Decreases Light Output by 60%	HP[11] High Power Version Increases Light Output by 100%					

Product Modifications

Please list modification requirements for review by factory:

Approvals

Date:

BUY AMERICAN NRTL WET 5 UNION MADE ASTM & PCI FINISH IK10 RoHS ida

Selux Corporation © 2022, T 845-834-1400, 800-735-8927, F 845-834-1401, www.selux.us
In a continuing effort to offer the best product possible, we reserve the right to change, without notice, specifications or materials that in our opinion will not alter the function of the product. Specification sheets found at www.selux.us are the most recent versions and supercede all other printed or electronic versions.

Page 1 of 9 (Rev. 06/2022) IBL_ss_v4.1

3 BOLLARD LIGHT FIXTURE

NTS

Date: ______ Customer: ______

Project: ______

Type: ______ Qty: ______

selux

Ouray 500

Order Code: U5 - ___ - ___ - ___ - ___ - ___ - ___ - ___ - ___ - ___

Pole Order Code: ___ - ___ - ___ - ___ (Series, Height, Finish, Options)

U5	Series	U5 Ouray 500								
___	Optics	R1 Type I	R2 Type II	R3 Type III	R3W Type III (Wide)	R4 Type IV	R5R Type V (Round)	R5S Type V (Square)	R5Q Type V (Rectangular)	PP Plane Projector
___	Fixed Mounting	S 60mm Slip Fitter	SA Single Pole Adaptor	S1 Single Short Arm	S2 Double Short Arm	L1 Single Long Arm	L2 Double Long Arm	W Wall Mount	WD Decorative Wall Box	* May be combined with adjustable mounting
___	Adjustable Mounting	AT[1] Adjustable Tilt	AS Adjustable Swivel	XX None						
___	Light Engine	5G350 44W/4931lm	5G530 68W/7233lm	5G700 89W/9083lm	5G105 136W/12,517lm	5G140[2] 183W/15,307lm				[2]347/480V and HLXX options cannot be combined with 5G140 *Based on RI distributions at 3000K CCT no glass.
___	CCT	27[1]* 2700K	30[1] 3000K	35* 3500K	40 4000K	50* 5000K				[1]2700K and 3000K IDA Approved * Consult factory for lead time
___	Power Cord Length	8 8'	10 10'	12 12'	14 14'	16 16'	18 18'	XX XX'		*Add length of arm and height of pole to determine power cord length
___	Finish	WH White	BK Black	BL Semi-Matte Black	BZ Bronze	SV Silver	SP Specify Premium Color			
___	Voltage	UNV 120-277V	120[4] 120V	240[4] 240V	277[4] 277V	347 347V	480 480V			[4]Specify for HLXX option
___	Options	DM[6] Dimming (0-10V)	HS[5] House Side Shield (180°)	HL30[6,8] Hi-Lo Switching Low Output 30%	HL50[6,8] Hi-Lo Switching Low Output 50%	CO[9] Comfort Optics (Not available with PP optics)	GL[9] Tempered Glass Lens	TLR[6] Twist Lock Receptacle 7-Pin with Shorting Cap		[5]Type I, II, III, and IV only [6]DM, HLXX, TLR, MS or IMS only. Cannot be combined. [7]TLRP, IMS or MS only. Cannot be combined. [8]120V, 240V or 277V only [9]Glass is included with CO and PP options and does not need to be specified separately
		TLRP[7] Twist Lock Receptacle 3-Pin with Photocell	IMS[6,7] Internal Motion Sensor (See page 12 for order code)	MS[6,7] Pole Motion Sensor with Optional (See page 10 for order code)						

BUY AMERICAN NRTL WET 5 ida IP65 RoHS UNION MADE

Selux Corporation © 2022, T 845-834-1400, 800-735-8927, F 845-834-1401, www.selux.us
In a continuing effort to offer the best product possible, we reserve the right to change, without notice, specifications or materials that in our opinion will not alter the function of the product. Specification sheets found at www.selux.us are the most recent versions and supercede all other printed or electronic versions.

Page 1 of 15 (Rev. 08/2022) ORY5_ss_v6.1

4 AREA LIGHT FIXTURE

NTS

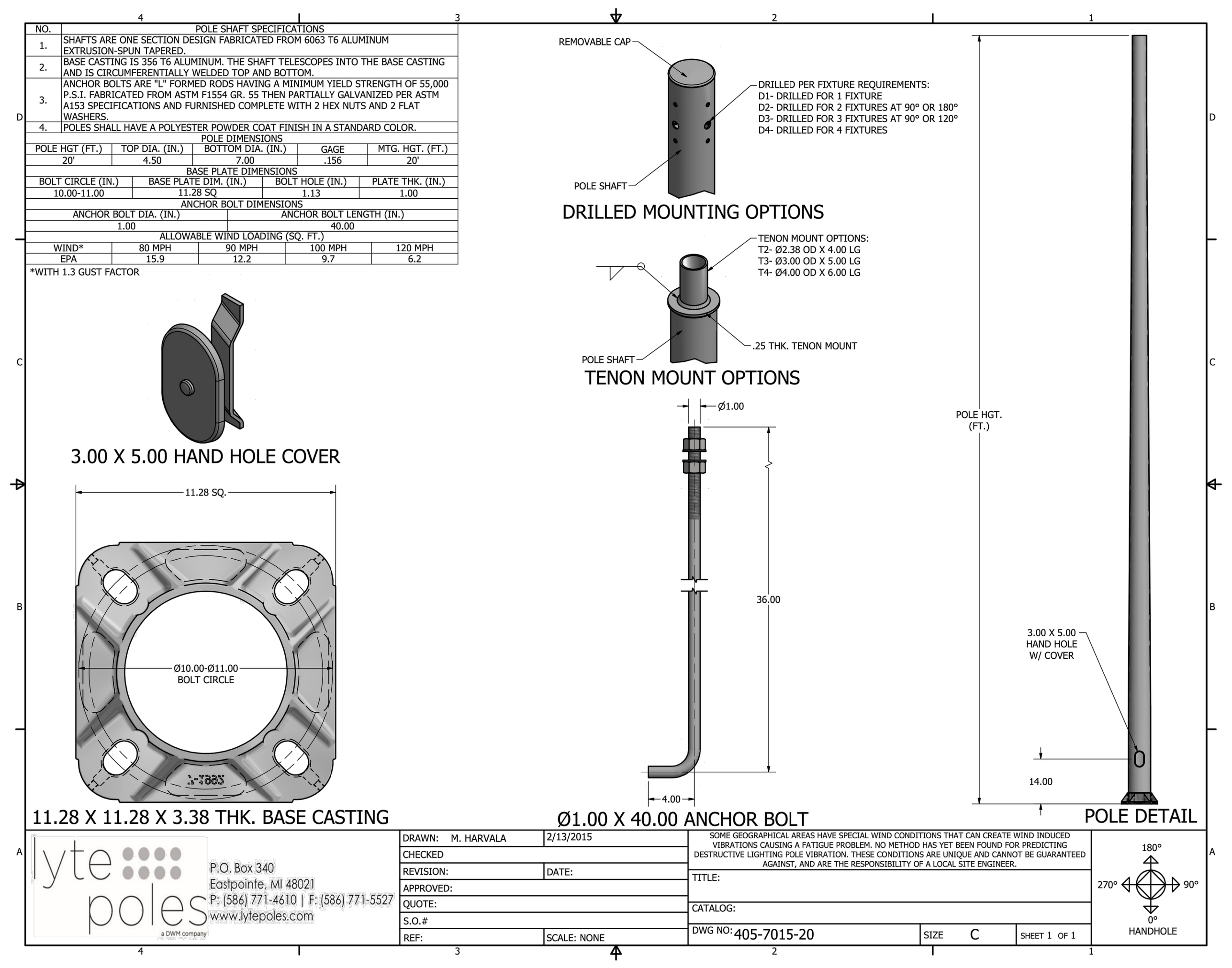

5 AREA LIGHT POILE

NTS

Date: ______ Customer: ______

Project: ______

Type: ______ Qty: ______

selux

Saturn Cutoff LED

Order Code: ___ - ___ - ___ - ___ - ___ - ___ - ___ - ___ - ___

Pole Order Code: ___ - ___ - ___ - ___ (Series, Height, Finish, Options)

SACL	Series	SACL Saturn Cutoff LED							
___	Optics	R1 Type I	R2 Type II	R3 Type III	R3W Type III (Wide)	R4 Type IV	R5R Type V (Round)	R5S Type V (Square)	R5Q Type V (Rectangular)
___	Mounting	1 Single	1A Single Arm Mount	2 Double	W Wall Mount				
___	Light Engine	5G450 39W/4442lm	5G700 62W/6644lm	5G105 93W/9241lm					*Based on RI distribution in 3000K CCT
___	CCT	27[1] 2700K	30[1] 3000K	40 4000K					[1]IDA Approved *For other CCT please consult factory
___	Power Cord Length	08 8 ft	10 10 ft	12 12 ft	14 14ft	16 16 ft	18 18 ft	XX XX	*For 1 mounting use the pole height. For 1A or 2 mounting use the pole height +2
___	Finish	WH White	BK Black	BL Semi-Matte Black	BZ Bronze	SV Silver	SP Specify Premium Color		
___	Voltage	UNV 120- 277	120 120V	240 240V	277 277V	347[2] 347V	480[2] 480V		[2]Equipped with step-down transformer
___	Options	DM[4] Dimming (0-10V)	HS[3] House Side Shield (180°)	HL30[4,5] Hi-Lo Switching Low Output 30%	HL50[4,5] Hi-Lo Switching Low Output 50%	DS No Uplight Finish	PCT[6] Photocell Tenon	MS[4,6] Pole Motion Sensor with Optional Photocell (See pagr 3 for order code)	[3]Type I, II, III, and IV only [4]DM, HLXX or MS only. Cannot be combined. [5]120V, 240V or 277V only [6]PCT or MS only. Cannot be combined.

Product Modifications

Please list modification requirements for review by factory:

Approvals

Date:

BUY AMERICAN NRTL WET 5 ida IP65 RoHS UNION MADE

Selux Corporation © 2022, T 845-834-1400, 800-735-8927, F 845-834-1401, www.selux.us
In a continuing effort to offer the best product possible, we reserve the right to change, without notice, specifications or materials that in our opinion will not alter the function of the product. Specification sheets found at www.selux.us are the most recent versions and supercede all other printed or electronic versions.

Page 1 of 11 (Rev. 08/2022) SACL_v6.9

6 PEDESTRIAN LIGHT FIXTURE

NTS

Date: ______ Customer: ______

Project: ______

Type: ______ Qty: ______

selux

S635
6" to 3½" Round Straight Stepped Steel Pole

Order Code: S635 - ___ - ___ - ___

S635	Series	S635 6" to 3½" Round Straight Stepped Steel Pole						
___	Height	8 8'	10 10'	12 12'	14 14'	16 16'	18 18'	
___	Finish	WH White	BK Black	BZ Bronze	SV Silver	SP Specify Premium Color		
___	Options	BC6 Stanard Base Cover	REC GFCI Receptacle with weather-proof cover	REC2 GFCI Receptacle with padlockable in-use cover	REC3 USB and Duplex Receptacle with weather-proof cover	REC4 USB and Duplex Receptacle with weatherproof padlockable in-use coverable in use cover	MS Motion Sensor with Optional Photocell (Meets Title 24 requirement	For PCT refer to fixture spec sheets (where applicable). For other option please consult factory.

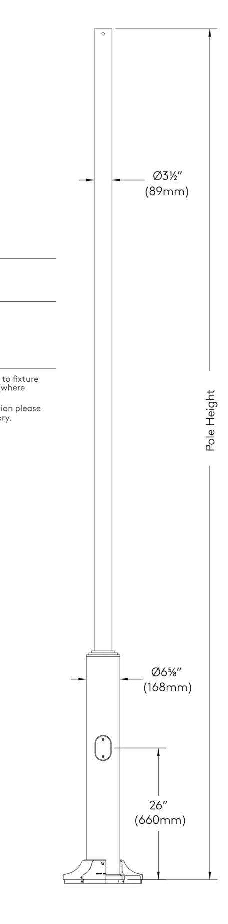

Product Modifications

Please list modification requirements for review by factory:

Approvals

Date:

Selux Corporation © 2020, T 845-834-1400, 800-735-8927, F 845-834-1401, www.selux.us
In a continuing effort to offer the best product possible, we reserve the right to change, without notice, specifications or materials that in our opinion will not alter the function of the product. Specification sheets found at www.selux.us are the most recent versions and supercede all other printed or electronic versions.

Page 1 of 6 (Rev. 08/2022) S635_SS_v1.7

7 PEDESTRIAN LIGHT POLE

NTS

Date	Description	No.

Revisions

Signature — Date

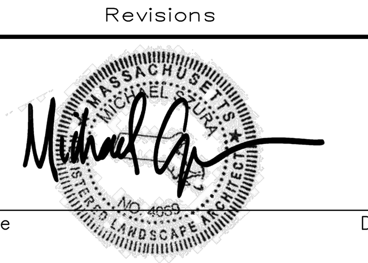

LANGAN
Langan Engineering and Environmental Services, Inc.
100 Cambridge Street, Suite 1310
Boston, MA 02114
T: 617.824.9100 F: 617.824.9101 www.langan.com

Project

237 PLEASANT STREET CONCEPT PLANS

FRANKLIN
NORFOLK COUNTY MASSACHUSETTS

Drawing Title

LIGHTING NOTES AND DETAILS

Project No. 151019602
Date 09/10/2022
Drawn By SD
Checked By MH
Drawing No. LL501

© 2022 Langan

PLANT SCHEDULE

KEY	QTY.	BOTANICAL NAME	COMMON NAME	SIZE	ROOT	REMARKS
SHADE TREE(S)						
AR	18	ACER RUBRUM	RED MAPLE	2 1/2–3" CAL.	B+B	–
ASGM	18	ACER SACCHARUM 'GREEN MOUNTAIN'	GREEN MOUNTAIN SUGAR MAPLE	2 1/2–3" CAL.	B+B	–
PLO	23	PLATANUS OCCIDENTALIS	AMERICAN SYCAMORE	2 1/2–3" CAL.	B+B	–
ORNAMENTAL TREE(S)						
BND	32	BETULA NIGRA 'DURA HEAT'	DURA HEAT RIVER BIRCH	10–12'	B+B	–
CF	1	CORNUS FLORIDA	WHITE FLOWERING DOGWOOD	2–2 1/2" CAL.	B+B	–
EVERGREEN TREE(S)						
JV	12	JUNIPERUS VIRGINIANA	EASTERN RED CEDAR	8–10'	B+B	–
PGL	7	PICEA GLAUCA	WHITE SPRUCE	6–7'	B+B	–
EVERGREEN SHRUB(S)						
TOE	23	THUJA OCCIDENTALIS 'EMERALD'	EMERALD GREEN ARBORVITAE	5–6'	B+B	–
DECIDUOUS SHRUB(S)						
CAH	201	CLETHRA ALNIFOLIA 'HUMMINGBIRD'	SWEET PEPPERBUSH	18–24"	CONTAINER	–
COS	47	CORNUS SERICEA	RED OSIER DOGWOOD	2–3'	B+B	–
HVCW	6	HAMAMELIS VIRGINIANA	COMMON WITCHHAZEL	3–4'	B+B	–
ORNAMENTAL GRASS(ES)						
CAPA	56	CAREX APPALACHICA	APPALACHIAN SEDGE	1 GAL.	CONTAINER	spaced @ 18" o.c.
CPEN	1094	CAREX PENSYLVANICA	SEDGE	2 GAL.	CONTAINER	spaced @ 15" o.c.
EGA	96	ERAGROSTIS SPECTABILIS	PURPLE LOVE GRASS	1 GAL.	CONTAINER	spaced @ 18" o.c.
MC	18	MUHLENBERGIA CAPILLARIS	MUHLY GRASS	2 GAL.	CONTAINER	spaced @ 24" o.c.
PVS	343	PANICUM VIRGATUM 'SHENANDOAH'	SHENANDOAH SWITCH GRASS	2 GAL.	CONTAINER	spaced @ 24" o.c.
SPHE	1071	SPOROBOLUS HETEROLEPIS	PRAIRIE DROPSEED	1 GAL.	CONTAINER.	spaced @ 18" o.c.
SSCO	480	SCHIZACHYRIUM SCOPARIUM	LITTLE BLUESTEM	2 GAL.	CONTAINER	spaced @ 18" o.c.

NOTE: IF ANY DISCREPANCIES OCCUR BETWEEN AMOUNTS SHOWN IN THE PLAN AND THE PLANT LIST, THE PLAN SHALL DICTATE.

TOWN OF FRANKLIN - ZONING BYLAW REGULATIONS COMPLIANCE CHART

REGULATION SECTION	REQUIRED / PERMITTED	PROVIDED / PROPOSED	COMPLIANCE
195–18.5.D.2	LARGE PARKING AREAS (E.G. GREATER THAN 20 PARKING SPACES) SHALL BE SEPARATED BY LANDSCAPED ISLANDS OF AT LEAST EIGHT FEET IN WIDTH, OR IN THE ALTERNATIVE SHALL DEVOTE AT LEAST 5% OF THE INTERIOR OF THE PARKING LOT TO LANDSCAPING. IN ADDITION, A MINIMUM OF ONE TREE SHALL BE PLANTED OR EVERY SIX PARKING SPACES REQUIRED OR BUILT, WITHIN APPROPRIATE LOCATIONS ON THE LOT.	102 PARKING SPACES / 6 = 17 TREES. 17 TREES REQUIRED. 19 TREES PROVIDED	COMPLIES

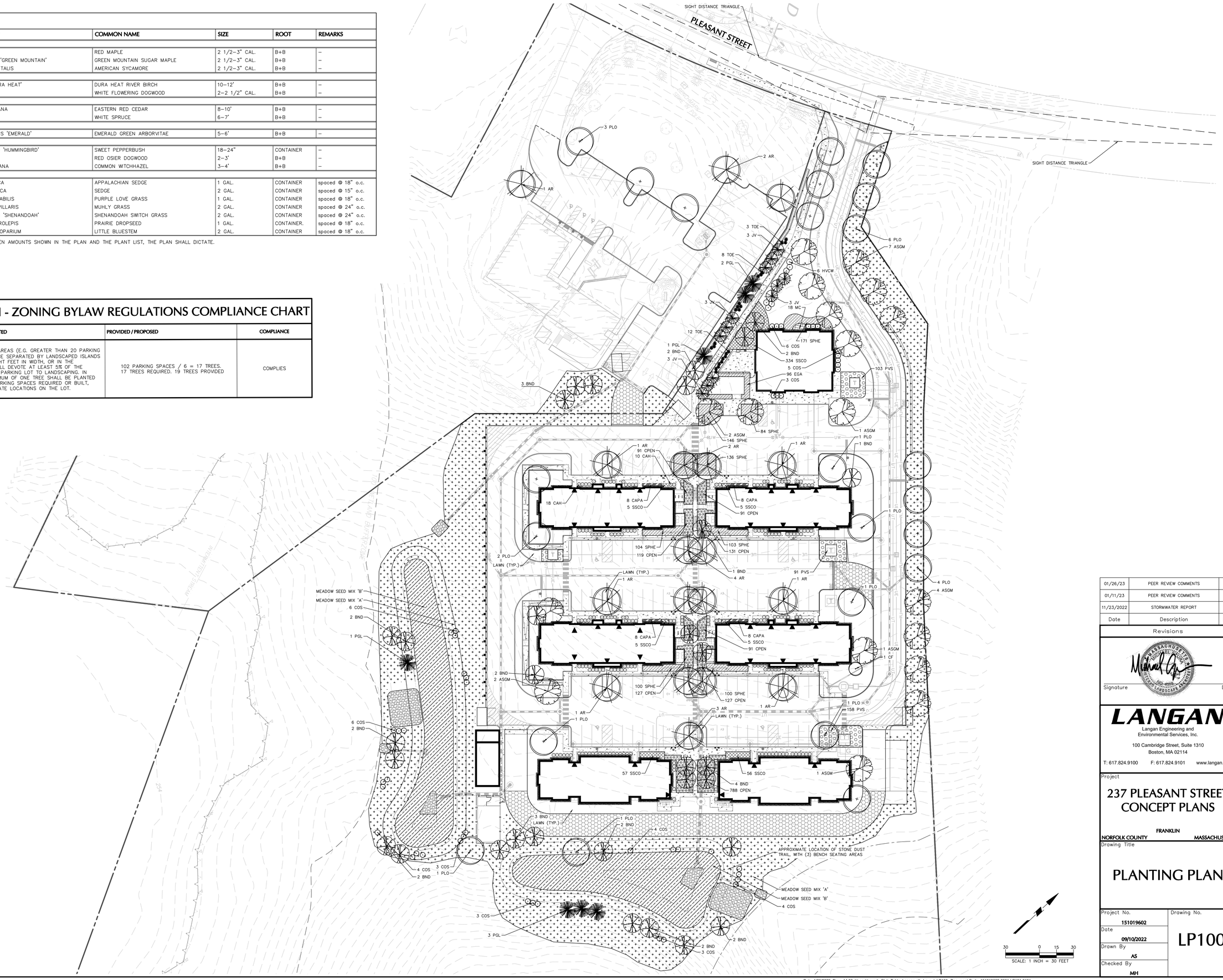

Date	Description	No.
01/26/23	PEER REVIEW COMMENTS	3
01/11/23	PEER REVIEW COMMENTS	2
11/23/2022	STORMWATER REPORT	1

Revisions

Signature Date

LANGAN
Langan Engineering and Environmental Services, Inc.
100 Cambridge Street, Suite 1310
Boston, MA 02114
T: 617.824.9100 F: 617.824.9101 www.langan.com

Project

237 PLEASANT STREET CONCEPT PLANS

FRANKLIN
NORFOLK COUNTY MASSACHUSETTS

Drawing Title

PLANTING PLAN

Project No. 151019602
Date 09/10/2022
Drawn By AS
Checked By MH
Drawing No. LP100

© 2022 Langan

GENERAL LANDSCAPE PLANTING NOTES

1. NAMES OF PLANTS AS DESCRIBED ON THIS PLAN CONFORM TO THOSE GIVEN IN "STANDARDIZED PLANT NAMES", 1942 EDITION, PREPARED BY THE AMERICAN JOINT COMMITTEE ON HORTICULTURAL NOMENCLATURE. NAMES OF PLANT VARIETIES NOT INCLUDED THEREIN CONFORM TO NAMES GENERALLY ACCEPTED IN NURSERY TRADE.
2. ALL EXPOSED GROUND SURFACES THAT ARE NOT PAVED WITHIN THE CONTRACT LIMIT LINE, AND THAT ARE NOT COVERED BY LANDSCAPE PLANTING OR SEEDING AS SPECIFIED, SHALL BE COVERED BY A NATURAL MULCH THAT WILL PREVENT SOIL EROSION AND THE EMANATION OF DUST.
3. NO PLANT SHALL BE PUT INTO THE GROUND BEFORE ROUGH GRADING HAS BEEN COMPLETED AND APPROVED BY THE PROJECT LANDSCAPE ARCHITECT OR PROJECT ENGINEER.
4. STANDARDS FOR TYPE, SPREAD, HEIGHT, ROOT BALL AND QUALITY OF NEW PLANT MATERIAL SHALL BE IN ACCORDANCE WITH GUIDELINES AS SET FORTH IN THE "AMERICAN STANDARD FOR NURSERY STOCK", PUBLISHED BY THE AMERICAN ASSOCIATION OF NURSERYMEN. PLANT MATERIAL SHALL HAVE NORMAL HABIT OF GROWTH AND BE HEALTHY, VIGOROUS, AND FREE FROM DISEASES AND INSECT INFESTATION.
5. NEW PLANT MATERIAL SHALL BE NURSERY GROWN UNLESS SPECIFIED OTHERWISE. ALL PLANTS SHALL BE SET PLUMB AND SHALL BEAR THE SAME RELATIONSHIP TO FINISHED GRADE AS THE PLANT'S ORIGINAL GRADE BEFORE DIGGING. PLANT MATERIAL OF THE SAME SPECIES AND SPECIFIED AS THE SAME SIZE SHOULD BE SIMILAR IN SHAPE, COLOR AND HABIT. THE LANDSCAPE ARCHITECT HAS THE RIGHT TO REJECT PLANT MATERIAL THAT DOES NOT CONFORM TO THE TYPICAL OR SPECIFIED HABIT OF THAT SPECIES.
6. THE CONTRACTOR SHALL VERIFY THE LOCATION OF ALL EXISTING UNDERGROUND UTILITY AND SEWER LINES PRIOR TO THE START OF EXCAVATION ACTIVITIES. NOTIFY THE PROJECT ENGINEER AND OWNER IMMEDIATELY OF ANY CONFLICTS WITH PROPOSED PLANTING LOCATIONS. THE CONTRACTOR SHALL BE RESPONSIBLE FOR ANY DAMAGE.
7. THE CONTRACTOR SHALL NOT MAKE SUBSTITUTIONS. IF THE SPECIFIED LANDSCAPE MATERIAL IS NOT OBTAINABLE, THE CONTRACTOR SHALL SUBMIT PROOF OF NON-AVAILABILITY TO THE LANDSCAPE ARCHITECT AND OWNER, TOGETHER WITH A WRITTEN PROPOSAL FOR USE OF AN EQUIVALENT MATERIAL.
8. LANDSCAPE CONTRACTOR TO STAKE OUT PLANTING LOCATIONS, FOR REVIEW AND APPROVAL BY THE LANDSCAPE ARCHITECT AND/OR OWNER BEFORE PLANTING WORK BEGINS. THE LANDSCAPE ARCHITECT AND/OR OWNER SHALL DIRECT THE CONTRACTOR IN THE FINAL PLACEMENT OF ALL PLANT MATERIAL AND LOCATION OF PLANTING BEDS TO ENSURE COMPLIANCE WITH DESIGN INTENT UNLESS OTHERWISE INSTRUCTED.
9. THE LANDSCAPE ARCHITECT MAY REVIEW PLANT MATERIALS AT THE SITE, BEFORE PLANTING, FOR COMPLIANCE WITH REQUIREMENTS FOR GENUS, SPECIES, VARIETY, SIZE, AND QUALITY. THE LANDSCAPE ARCHITECT RETAINS THE RIGHT TO FURTHER REVIEW PLANT MATERIALS FOR SIZE AND CONDITION OF BALLS AND ROOT SYSTEM, INSECTS, INJURIES, AND LATENT DEFECTS, AND TO REJECT UNSATISFACTORY OR DEFECTIVE MATERIAL AT ANY TIME DURING PROGRESS OF WORK. THE CONTRACTOR SHALL REMOVE REJECTED PLANT MATERIALS IMMEDIATELY FROM PROJECT SITE AS DIRECTED BY THE LANDSCAPE ARCHITECT OR OWNER.
10. DELIVERY, STORAGE, AND HANDLING
    A. PACKAGED MATERIALS: PACKAGED MATERIALS SHALL BE DELIVERED IN CONTAINERS SHOWING WEIGHT, ANALYSIS, AND NAME OF MANUFACTURER. MATERIALS SHALL BE PROTECTED FROM DETERIORATION DURING DELIVERY, AND WHILE STORED AT SITE.
    B. TREES AND SHRUBS: THE CONTRACTOR SHALL PROVIDE TREES AND SHRUBS DUG FOR THE GROWING SEASON FOR WHICH THEY WILL BE PLANTED. DO NOT PRUNE PRIOR TO DELIVERY UNLESS OTHERWISE DIRECTED BY THE LANDSCAPE ARCHITECT. DO NOT BEND OR BIND-TIE TREES OR SHRUBS IN SUCH A MANNER AS TO DAMAGE BARK, BREAK BRANCHES, OR DESTROY NATURAL SHAPE. PROVIDE PROTECTIVE COVERING DURING TRANSIT. DO NOT DROP BALLED AND BURLAPPED STOCK DURING DELIVERY OR HANDLING.
    C. ALL PLANTS SHALL BE BALLED AND BURLAPPED OR CONTAINER GROWN AS SPECIFIED. NO CONTAINER GROWN STOCK WILL BE ACCEPTED IF IT IS ROOT BOUND. ALL ROOTBALL WRAPPING AND BINDING MATERIAL MADE OF SYNTHETICS OR PLASTICS SHALL BE REMOVED FROM THE TOP OF THE BALL AT THE TIME OF PLANTING. IF THE PLANT IS SHIPPED WITH A WIRE BASKET AROUND THE ROOT BALL, THE WIRE BASKET SHALL BE CUT AND FOLDED DOWN 8 INCHES INTO THE PLANTING HOLE. WITH CONTAINER GROWN STOCK, THE CONTAINER SHALL BE REMOVED AND THE ROOT BALL SHALL BE CUT THROUGH THE SURFACE IN TWO LOCATIONS.
    D. THE CONTRACTOR SHALL HAVE TREES AND SHRUBS DELIVERED TO SITE AFTER PREPARATIONS FOR PLANTING HAVE BEEN COMPLETED AND PLANT IMMEDIATELY. IF PLANTING IS DELAYED MORE THAN 6 HOURS AFTER DELIVERY, THE CONTRACTOR SHALL SET TREES AND SHRUBS IN SHADE, PROTECT FROM WEATHER AND MECHANICAL DAMAGE AND KEEP ROOTS MOIST BY COVERING WITH MULCH, BURLAP OR OTHER ACCEPTABLE MEANS OF RETAINING MOISTURE.
11. ALL LANDSCAPED AREAS TO BE CLEARED OF ROCKS, STUMPS, TRASH AND OTHER UNSIGHTLY DEBRIS. ALL FINE GRADED AREAS SHOULD BE HAND RAKED SMOOTH ELIMINATING ANY CLUMPS AND AND UNEVEN SURFACES PRIOR TO PLANTING OR MULCHING.
12. ALL PLANT MATERIAL SHALL BE INSTALLED AS PER DETAILS, NOTES AND CONTRACT SPECIFICATIONS. THE LANDSCAPE ARCHITECT MAY REVIEW INSTALLATION AND MAINTENANCE PROCEDURES.
13. NEW PLANT MATERIAL SHALL BE GUARANTEED TO BE ALIVE AND IN VIGOROUS GROWING CONDITION FOR A PERIOD OF ONE YEAR FOLLOWING ACCEPTANCE BY THE OWNER. PLANT MATERIAL FOUND TO BE UNHEALTHY, DYING OR DEAD DURING THIS PERIOD, SHALL BE REMOVED AND REPLACED IN KIND BY THE CONTRACTOR AT NO EXPENSE TO THE OWNER.
14. THE CONTRACTOR SHALL KEEP AREA CLEAN DURING DELIVERY AND INSTALLATION OF PLANT MATERIALS. REMOVE AND DISPOSE OF OFF-SITE ANY ACCUMULATED DEBRIS OR UNUSED MATERIALS. REPAIR DAMAGE TO ADJACENT AREAS CAUSED BY LANDSCAPE INSTALLATION OPERATIONS.
15. ALL PLANTS SHALL BE WATERED THOROUGHLY TWICE DURING THE FIRST 24-HOUR PERIOD AFTER PLANTING. ALL PLANTS SHALL THEN BE WATERED WEEKLY OR AS REQUIRED BY SITE AND WEATHER CONDITIONS TO MAINTAIN VIGOROUS AND HEALTHY PLANT GROWTH.
16. THE BACKFILL MIXTURE AND SOIL MIXES TO BE INSTALLED PER THE SPECIFICATIONS.
17. AFTER PLANT IS PLACED IN TREE PIT LOCATION, ALL TWINE HOLDING ROOT BALL TOGETHER SHOULD BE COMPLETELY REMOVED AND THE BURLAP SHOULD BE PULLED DOWN SO 1/3 OF THE ROOT BALL IS EXPOSED. SYNTHETIC BURLAP SHOULD BE COMPLETELY REMOVED AFTER INSTALLATION.
18. MULCH SHOULD NOT BE PILED UP AROUND THE TRUNK OF ANY PLANT MATERIAL. NO MULCH OR TOPSOIL SHOULD BE TOUCHING THE BASE OF THE TRUNK ABOVE THE ROOT COLLAR.
19. ALL FENCE INSTALLATION SHALL BE COMPLETED PRIOR TO COMMENCEMENT OF ANY LANDSCAPE PLANTING, LAWN AND GRASSES, OR IRRIGATION WORK.
20. FOR ANY DISCREPANCIES BETWEEN THE PLANT SCHEDULE AND PLANTING PLAN THE GRAPHIC QUANTITY SHOWN SHALL GOVERN.
21. PLANT MATERIALS SHALL NOT BE PLANTED UNTIL THE FINISHED GRADING HAS BEEN COMPLETED.
22. ALL PLANT INSTALLATIONS SHALL BE COMPLETED EITHER BETWEEN APRIL 1 – JUNE 15 OR AUGUST 15 – NOVEMBER 1, UNLESS OTHERWISE DIRECTED BY THE PROJECT LANDSCAPE ARCHITECT. SEE LAWN SEEDING DATES IN SEEDING NOTES.

LANDSCAPE MAINTENANCE NOTES

1. MAINTENANCE OPERATIONS BEFORE APPROVAL:
   A. PLANT CARE SHALL BEGIN IMMEDIATELY AFTER EACH PLANT IS SATISFACTORILY INSTALLED AND SHALL CONTINUE THROUGHOUT THE LIFE OF THE CONTRACT UNTIL FINAL ACCEPTANCE OF THE PROJECT.
   B. CARE SHALL INCLUDE, BUT NOT BE LIMITED TO, REPLACING MULCH THAT HAS BEEN DISPLACED BY EROSION OR OTHER MEANS, REPAIRING AND RESHAPING WATER RINGS OR SAUCERS, MAINTAINING STAKES AND GUYS AS ORIGINALLY INSTALLED, WATERING WHEN NEEDED OR DIRECTED, AND PERFORMING ANY OTHER WORK REQUIRED TO KEEP THE PLANTS IN A HEALTHY CONDITION.
   C. CONTRACTOR SHALL REMOVE AND REPLACE ALL DEAD, DEFECTIVE AND/OR REJECTED PLANTS AS REQUIRED BEFORE FINAL ACCEPTANCE.
2. MAINTENANCE DURING CONSTRUCTION:
   A. MAINTENANCE SHALL BEGIN IMMEDIATELY AFTER PLANTING. PLANTS SHALL BE WATERED, MULCHED, WEEDED, PRUNED, SPRAYED, FERTILIZED, CULTIVATED, AND OTHERWISE MAINTAINED AND PROTECTED UNTIL PROVISIONAL ACCEPTANCE. SETTLED PLANTS SHALL BE RESET TO PROPER GRADE AND POSITION, PLANTING SAUCER RESTORED AND DEAD MATERIAL REMOVED. STAKES AND WIRES SHALL BE TIGHTENED AND REPAIRED. DEFECTIVE WORK SHALL BE CORRECTED AS SOON AS POSSIBLE AFTER IT BECOMES APPARENT AND WEATHER AND SEASON PERMIT.
   B. IF A SUBSTANTIAL NUMBER OF PLANTS ARE SICKLY OR DEAD AT THE TIME OF INSPECTION, ACCEPTANCE SHALL NOT BE GRANTED AND THE CONTRACTOR'S RESPONSIBILITY FOR MAINTENANCE OF ALL PLANTS SHALL BE EXTENDED FROM THE TIME REPLACEMENTS ARE MADE OR EXISTING PLANTS ARE DEEMED ACCEPTABLE BY THE LANDSCAPE ARCHITECT.
   C. ALL REPLACEMENTS SHALL BE PLANTS OF THE SAME KIND AND SIZE SPECIFIED ON THE PLANT LIST OR THAT WHICH WAS TO REMAIN OR BE RELOCATED. THEY SHALL BE FURNISHED AND PLANTED AS SPECIFIED. THE COST SHALL BE BORNE BY THE CONTRACTOR. REPLACEMENTS RESULTING FROM REMOVAL, LOSS, OR DAMAGE DUE TO OCCUPANCY OF THE PROJECT IN ANY PART, VANDALISM, PHYSICAL DAMAGE BY ANIMALS, VEHICLES, ETC., AND LOSSES DUE TO CURTAILMENT OF WATER BY LOCAL AUTHORITIES SHALL BE APPROVED AND PAID FOR BY THE OWNER.
   D. PLANTS SHALL BE GUARANTEED FOR A PERIOD OF ONE YEAR AFTER INSPECTION AND PROVISIONAL ACCEPTANCE.
   E. AT THE END OF THE ESTABLISHMENT PERIOD, INSPECTION SHALL BE MADE AGAIN. ANY PLANT REQUIRED UNDER THIS CONTRACT THAT IS DEAD OR UNSATISFACTORY TO THE LANDSCAPE ARCHITECT OR OWNER SHALL BE REMOVED FROM THE SITE AND REPLACED DURING THE NORMAL PLANTING SEASON.
3. LAWN MAINTENANCE:
   A. BEGIN MAINTENANCE IMMEDIATELY AFTER EACH PORTION OF LAWN IS PLANTED AND CONTINUE FOR 8 WEEKS AFTER ALL LAWN PLANTING IS COMPLETED.
   B. WATER TO KEEP SURFACE SOIL MOIST, REPAIR WASHED OUT AREAS BY FILLING WITH TOPSOIL, LIMING, FERTILIZING AND RE-SEEDING; MOW TO 2 1/2 – 3 INCHES AFTER GRASS REACHES 3 1/2 INCHES IN HEIGHT, AND MOW FREQUENTLY ENOUGH TO KEEP GRASS FROM EXCEEDING 3 1/2 INCHES. WEED BY LOCAL SPOT APPLICATION OF SELECTIVE HERBICIDE ONLY AFTER GRASS IS WELL-ESTABLISHED.

LAWN WATERING SCHEDULE

THE FOLLOWING WATERING SCHEDULE COVERS ROUGHLY 8 WEEKS TO ESTABLISH A HEALTHY STAND OF GRASS FROM SEED. THE CONTRACTOR SHALL BE OBLIGATED TO ENSURE A HEALTHY STAND OF GRASS AT THE END OF THE MAINTENANCE/BOND PERIOD. ANY BARE OR DEAD AREAS IN THE LAWN SHALL BE PREPARED, RESEEDED AND REESTABLISHED PRIOR TO THE END OF THE MAINTENANCE/BOND PERIOD AND TO THE SATISFACTION OF THE PROJECT LANDSCAPE ARCHITECT AND THE OWNER.

IMPORTANT ASPECTS TO ATTAINING AND SUSTAINING A HEALTHY STAND OF GRASS ARE THE INSTALLATION OF TOPSOIL, SEED BED PREPARATION, ATTAINING OPTIMAL pH FOR THE INTENDED PLANT SPECIES, FERTILIZING, MULCH COVERING, AND SUFFICIENT WATERING PER THESE NOTES AND/OR PROJECT SPECIFICATIONS.

1. SEEDING SHALL BE DONE DURING THE SEASONS SPECIFIED IN THE LAWN SEED MIX NOTES AND/OR PROJECT SPECIFICATIONS.
2. AFTER THE SEEDBED IS PREPARED, SEED IS INSTALLED, AND MULCH IS APPLIED, WATER LIGHTLY TO KEEP THE TOP 2 INCHES OF SOIL CONSISTENTLY MOIST, NOT SATURATED. AT NO TIME SHOULD WATER BE APPLIED TO THE POINT OF RUNOFF OR THE DISPLACEMENT OF SEED.
3. DEPENDING ON SOIL TEMPERATURES, IT MAY TAKE SEVERAL WEEKS FOR GERMINATION TO OCCUR. DIFFERENT SPECIES WITHIN THE MIX GERMINATE AT DIFFERENT TIMES AND THEREFORE CONTRACTOR SHOULD CONTINUE THE LIGHT WATERING, AS DESCRIBED ABOVE, UNTIL THERE IS AT LEAST 2 INCHES OF GROWTH THROUGHOUT.
4. AT THIS POINT, WATERING FREQUENCY MAY BE REDUCED TO EVERY 3 TO 5 DAYS. WATER SHALL BE APPLIED TO WET A 6 INCH MINIMUM SOIL DEPTH TO PROMOTE HEALTHY DEEP ROOTS.
5. BEGIN MOWING ONCE PER WEEK AFTER THE GRASS HAS REACHED 3 INCHES HEIGHT. MOW TO A HEIGHT OF NO LESS THAN 2-½ INCHES. AFTER 2 TO 3 WEEKS OF MOWING, CONTINUE TO WATER TO A 6 INCH MINIMUM SOIL DEPTH AS NECESSARY PER WEATHER CONDITIONS, AND SOIL MOISTURE SENSORS IF APPLICABLE.

LAWN SEED MIX:

1. LAWN SEED MIX: LESCO GRASS SEED – ALL PRO TRANSITION MIX (3 TURF-TYPE TALL-FESCUE GRASSES)

   NOTES:
   A) SEED RATE:
      1) NEW ESTABLISHMENT: SEED AT A RATE OF 6-8 LBS/1000 SQ FT
      2) RENOVATION: 20-50% EXISTING COVER: 5-7 LBS/1000 SQ FT
         50-75% EXISTING COVER: 4-6 LBS/1000 SQ FT
2. GENERAL SEED NOTES:
   A) FINAL SEED MIXTURES, RATES, AND SPECIES TO BE DETERMINED BASED ON PROJECT LANDSCAPE ARCHITECT REVIEW.
   B) SEEDING SHALL TAKE PLACE IN THE SPRING (APRIL 1 TO JUNE 15) OR THE FALL (SEPTEMBER 1 TO OCTOBER 15).
   C) ELIMINATE UNWANTED VEGETATION PRIOR TO SEEDING USING A GLYPHOSATE-BASED HERBICIDE PER MANUFACTURER'S SPECIFICATIONS.
   D) IT IS RECOMMENDED THAT CONTRACTOR INSTALL SEED MIXTURE USING A NO-TILL TRUAX-TYPE DRILL SEEDER WHERE APPLICABLE.
   E) THERE MUST BE CONTINUOUS SOIL MOISTURE FOR 4-6 WEEKS TO ALLOW FOR PROPER GERMINATION.

PLANTING SOIL SPECIFICATIONS

1. PLANTING SOIL, ALTERNATELY MAY BE REFERRED TO AS TOPSOIL, SHOULD BE FRIABLE, FERTILE, WELL DRAINED, FREE OF DEBRIS, TOXINS, TRASH AND STONES OVER 1/2" DIA., IT SHOULD HAVE A HIGH ORGANIC CONTENT SUITABLE TO SUSTAIN HEALTHY PLANT GROWTH AND SHOULD LOOK AESTHETICALLY PLEASING HAVING NO NOXIOUS ODORS.
2. PLANTING SOIL:

   REUSE SURFACE SOILS STOCKPILED ON SITE, VERIFYING COMPLIANCE WITH PLANTING SOIL AND TOPSOIL CRITERIA IN THIS SPECIFICATION THROUGH TESTING. CLEAN SURFACE SOIL OF ALL ROOTS, PLANTS, SOD, AND GRAVEL OVER 1" IN DIAMETER AND DELETERIOUS MATERIALS. IF ON-SITE SOILS ARE TO BE USED FOR PROPOSED PLANTING, THE CONTRACTOR SHALL DEMONSTRATE, THROUGH SOIL TESTING, THAT ON-SITE SOILS MEET THE SAME CRITERIA AS INDICATED IN NOTES PLANS AND SPECIFICATIONS.

   SUPPLEMENT WITH IMPORTED OR MANUFACTURED TOPSOIL FROM OFF SITE SOURCES WHEN TOPSOIL AND PLANTING SOIL QUANTITIES ARE INSUFFICIENT. OBTAIN SOIL DISPLACED FROM NATURALLY WELL-DRAINED SITES WHERE TOPSOIL OCCURS AT LEAST 4" DEEP. DO NOT OBTAIN FROM AGRICULTURAL LAND, BOGS, MARSHES OR CONTAMINATED SITES.

   CONTRACTOR SHALL TEST SOILS AND FURNISH SAMPLES UPON REQUEST. PACKAGED MATERIALS SHALL BE UNOPENED BAGS OR CONTAINERS, EACH BEARING A NAME, GUARANTEE, AND TRADEMARK OF THE PRODUCER, MATERIAL COMPOSITION, MANUFACTURER'S CERTIFIED ANALYSIS, AND THE WEIGHT OF THE MATERIALS. SOIL OR AMENDMENT MATERIALS SHALL BE STORED ON SITE TEMPORARILY IN STOCKPILES PRIOR TO PLACEMENT AND SHALL BE PROTECTED FROM INTRUSION OF CONTAMINANTS AND EROSION. AFTER MIXING, SOIL MATERIALS SHALL BE COVERED WITH A TARPAULIN UNTIL TIME OF ACTUAL USE.

   ALL PLANTING SOILS SHALL BE SUBMITTED FOR TESTING TO THE STATE COOPERATIVE EXTENSION SERVICE, OR APPROVED EQUAL, PRIOR TO DELIVERY TO THE SITE. CONTRACTOR SHALL FURNISH SOIL SAMPLES AND SOIL TEST RESULTS TO LANDSCAPE ARCHITECT OR OWNER AT A RATE OF ONE SAMPLE PER 500 CUBIC YARDS TO ENSURE CONSISTENCY ACROSS THE TOTAL VOLUME OF PLANTING SOIL REQUIRED. TEST RESULTS SHALL EVALUATE FOR ALL CRITERIA LISTED IN THIS SPECIFICATION. IF TESTING AGENCY DETERMINES THAT THE SOILS ARE DEFICIENT IN ANY MANNER AND MAY BE CORRECTED BY ADDING AMENDMENTS, THE CONTRACTOR SHALL FOLLOW STATED RECOMMENDATIONS FOR SOIL IMPROVEMENT AND FURNISH SUBMITTALS FOR ALL AMENDMENTS PRIOR TO DELIVERY OF SOIL TO THE PROJECT SITE.

   A. THE FOLLOWING TESTING SHOULD BE PERFORMED AND RESULTS GIVEN TO THE LANDSCAPE ARCHITECT FOR APPROVAL BEFORE INSTALLATION:
      a. PARTICLE SIZE ANALYSIS – LOAMY SAND: 60-75% SAND, 25-40% SILT, AND 5-15% CLAY.
      b. FERTILITY ANALYSIS: pH (5.5-6.5), SOLUBLE SALTS (LESS THAN 2 MMHO/CM), NITRATE, PHOSPHATE, POTASSIUM, CALCIUM AND MAGNESIUM
      c. ORGANIC MATTER CONTENT: 2.5-5% IN NATIVE SOILS; UP TO 10% IN AMENDED SOILS
      d. TOXIC SUBSTANCE ANALYSIS
      e. MATERIAL DRAINAGE RATE: 60% PASSING IN 2 MINUTES, 40% RETAINED
      f. NOT MORE THAN 1% OF MATERIAL SHALL BE RETAINED BY A #4 SIEVE
3. BASIN SOIL MIX:
   a. BASIN SOIL MIX IS TO BE USED IN ALL DETENTION BASINS.
   b. MIX TO CONSIST OF 60% COARSE SAND, 40% SUBMITTED TOPSOIL/HORTICULTURAL SOIL MIX
   c. TOPSOIL/HORTICULTURAL SOIL MIX: REFER TO SPECIFICATIONS LISTED IN SECTION ABOVE
   d. COARSE SAND

      1) PARTICLE SIZE ANALYSIS

SIEVE	PERCENT PASSING
3/8 INCH (9.5 MM)	100
NO 4 (4.75 MM)	95-100
NO 8 (2.36 MM)	80-100
NO 16 (1.18 MM)	50-85
NO 30 (.60 MM)	25-60
NO 50 (.30 MM)	10-30
NO 100 (.15 MM)	2-10
NO 200 (0.75 MM	2-5

      2) CHEMICAL ANALYSIS
         PH: LOWER THAN 7.0
         TOXIC SUBSTANCE ANALYSIS

   e. FINAL BIORETENTION MIX

      1) PARTICLE SIZE ANALYSIS
         a) SAND – 80-85%
         b) SILT – 10-15%
         c) CLAY – 2-5%

         NOT MORE THAN 1% OF MATERIAL TO BE RETAINED BY A #4 SIEVE

      2) CHEMICAL ANALYSIS
         a) PH – 5.5-6.5
         b) SOLUBLE SALTS: LESS THAN 2 MMHO/CM

      3) CONTRACTOR TO SUBMIT TOXIC SUBSTANCE ANALYSIS AND MATERIAL DRAINAGE RATE IN ADDITION TO INFORMATION LISTED ABOVE. DRAINAGE RATE OF MATERIAL TO EXCEED 1 INCH/HOUR
4. SOIL AMENDMENT FOR PLANT MATERIAL:
   IF SOIL ORGANIC CONTENT IS INADEQUATE, SOIL SHALL BE AMENDED WITH COMPOST OR ACCEPTABLE, WEED FREE, ORGANIC MATTER. ORGANIC AMENDMENT SHALL BE WELL COMPOSTED, PH RANGE OF 6-8; MOISTURE CONTENT 35-55% BY WEIGHT 100% PASSING THROUGH 1" SIEVE; SOLUBLE SALT CONTENT LESS THAN 0.5 MM HOS/CM; MEETING ALL APPLICABLE ENVIRONMENTAL CRITERIA FOR CLEAN FILL.

   A. ORGANIC MATTER AS A SOIL AMENDMENT: LEAF MOLD WITH 60-90% ORGANIC CONTENT BY WEIGHT. SHREDDED LEAF LITTER, COMPOSTED FOR A MINIMUM OF 1 YR. SHOULD BE FREE OF DEBRIS, STONES OVER 1/2", WOOD CHIPS OVER 1".
   B. SOIL IN BEDS AND PLANTING ISLANDS OTHER THAN BACKFILL MATERIAL AND TOPSOIL, SHOULD BE FRIABLE, WELL DRAINED, AND FREE OF DEBRIS, INCLUDING STONES AND TRASH.
   C. AMENDMENTS FOR BACK FILL IN TREE AND SHRUB PITS:
      a. GROUND LIMESTONE (WITH A MIN. OF 88% OF CALCIUM AND MAGNESIUM CARBONATES) USED PENDING RESULTS OF SOIL ANALYSIS.
         – BRING pH LEVELS TO 5.5 MIN. TO 6.5 FOR NON-ERICACEOUS PLANTS
         – BRING pH LEVELS TO 4.5 MIN. TO 5.5 FOR ERICACEOUS PLANTS
      b. TERRA-SORB BY 'PLANT HEALTH CARE' 800-421-9051 (SEE MANUFACTURER RECOMMENDATIONS) USED IN PLANTER BACKFILL MIXTURE WITH TREES AND SHRUBS.
      c. MYCOR-ROOT SAVER BY 'PLANT HEALTH CARE' 800-421-9051 (SEE MANUFACTURER RECOMMENDATIONS) USED IN BACKFILL MIXTURE WITH TREES.
5. WHERE PLANTING AREAS ARE PROPOSED FOR FORMER PAVED OR GRAVEL AREAS, BEDS SHALL BE EXCAVATED TO A MINIMUM 30" DEPTH AND, AT A MINIMUM, BE BACKFILLED WITH BOTTOM LAYER OF SANDY LOAM (ORGANIC CONTENT LESS THAN 2%) OVER WHICH TOPSOIL AND PLANTING SOILS WILL BE PLACED AT DEPTHS INDICATED IN PLANS, DETAILS AND NOTES.
6. CLEAN SOIL FILL IN LANDSCAPE AREAS:
   LANDSCAPE FILL MATERIAL, BELOW PLANTING SOILS, SHALL HAVE THE PHYSICAL PROPERTIES OF A SANDY LOAM WITH AN ORGANIC CONTENT OF LESS THAN 2% AND A PH BETWEEN 5 – 7.
7. SOIL PLACEMENT:
   A. CONTRACTOR TO PROVIDE SIX INCHES (6") MINIMUM DEPTH PLANTING SOIL LAYER IN LAWN AREAS, TWELVE INCHES (12") MINIMUM DEPTH PLANTING SOIL LAYER IN GROUNDCOVER AND PERENNIAL AREAS, EIGHTEEN INCHES (18") MINIMUM DEPTH PLANTING SOIL LAYER IN SHRUB AREAS, AND THIRTY-SIX INCHES (36") MINIMUM DEPTH PLANTING SOIL LAYER IN TREE PLANTING AREAS.
   B. SCARIFY AND/OR TILL COMPACTED SUBSOILS TO A MINIMUM DEPTH OF 6 INCHES. THOROUGHLY MIX A 6 INCH DEPTH LAYER OF PLANTING SOIL INTO THE SUBSOIL PRIOR TO PLACING PLANTING SOIL AT THE DEPTHS INDICATED ABOVE. PLANTING SOIL SHALL BE PLACED IN 12-18" LIFTS AND WATER THOROUGHLY BEFORE INSTALLING NEXT LIFT. REPEAT UNTIL DEPTHS AND FINISH GRADES HAVE BEEN ACHIEVED. NO SOILS SHALL BE PLACED IN A FROZEN OR MUDDY CONDITION.
   C. PLANTING SOIL PRESENT AT THE SITE, IF ANY, MAY BE USED TO SUPPLEMENT TOTAL AMOUNT REQUIRED. CONTRACTOR TO FURNISH AN ANALYSIS OF ON-SITE PLANTING SOIL UTILIZED IN ALL PLANTING AREAS.
8. SOIL CONDITIONING:
   A. ADJUST pH AND NUTRIENT LEVELS AS REQUIRED TO ENSURE AN ACCEPTABLE GROWING MEDIUM. LOWER pH USING ELEMENTAL SULFUR ONLY. PEAT MOSS OR COPPER SULFATE MAY NOT BE USED. GROUND LIMESTONE AS A SOIL AMENDMENT MATERIAL WILL ONLY BE USED PENDING RESULTS OF SOIL ANALYSIS. PROVIDE WITH MINIMUM 88% CALCIUM AND MAGNESIUM CARBONATES AND SHALL HAVE TOTAL 100% PASSING THE 10 MESH SIEVE, MINIMUM 90% PASSING 20 MESH SIEVE, AND MINIMUM 60% PASSING 100 MESH SIEVE.
   B. ALL DEBRIS EXPOSED FROM EXCAVATION AND CULTIVATION SHALL BE DISPOSED OF AT THE CONTRACTOR'S EXPENSE.
   C. SOIL MODIFICATIONS (PENDING RESULTS OF SOIL ANALYSIS):
      a. THOROUGHLY TILL ORGANIC MATTER (LEAF COMPOST) INTO THE TOP 6 TO 12 IN. OF MOST PLANTING SOILS TO IMPROVE THE SOIL'S ABILITY TO RETAIN WATER AND NUTRIENTS. ALL PRODUCTS SHOULD BE COMPOSTED TO A DARK COLOR AND BE FREE OF PIECES WITH IDENTIFIABLE LEAF OR WOOD STRUCTURE. AVOID MATERIAL WITH A pH HIGHER THAN 7.0. PEAT MOSS MAY NOT BE USED AS ORGANIC MATTER AMENDMENT.
      b. MODIFY HEAVY CLAY OR SILT (MORE THAN 40% CLAY OR SILT) BY ADDING COMPOSTED PINE BARK (UP TO 30% BY VOLUME) AND/OR GYPSUM. COARSE SAND MAY BE USED IF ENOUGH IS ADDED TO BRING THE SAND CONTENT TO MORE THAN 60% OF THE TOTAL MIX. IMPROVE DRAINAGE IN HEAVY SOILS BY PLANTING ON RAISED MOUNDS OR BEDS AND INCLUDING SUBSURFACE DRAINAGE LINES.
      c. MODIFY EXTREMELY SANDY SOILS (MORE THAN 85% SAND) BY ADDING ORGANIC MATTER AND/OR DRY, SHREDDED CLAY LOAM UP TO 30% OF THE TOTAL MIX.

IRRIGATION NOTES:

1. THE IRRIGATION CONTRACTOR SHALL PROVIDE SHOP DRAWINGS OF THE IRRIGATION INSTALLATION PLAN AND CUT-SHEETS FOR ALL COMPONENTS FOR REVIEW AND APPROVAL BY THE PROJECT LANDSCAPE ARCHITECT OR OWNER'S REPRESENTATIVE PRIOR TO CONSTRUCTION. THE IRRIGATION INSTALLATION PLAN SHALL BE COMPLETE WITH ZONE DESIGNATIONS AND WATER USAGE IN GALLONS PER MINUTE PER ZONE, RUN TIME SCHEDULE, LEGEND OF COMPONENTS AND PLAN GRAPHICS WITH QUANTITIES, MINIMUM SYSTEM REQUIREMENTS INCLUDING STATIC PRESSURE AT THE WATER CONNECTION POINT, ESTIMATED WATER BUDGET, CONSTRUCTION DETAILS AND IRRIGATION NOTES. THE PLAN SHALL ALSO INCLUDE LOCATIONS OF ALL PROPOSED SLEEVES AND THEIR SIZES, LOCATIONS OF ALL LATERAL LINE SIZE STEP-DOWNS WITH SIZE INDICATIONS, LOCATION OF ALL SOIL MOISTURE SENSORS, CONTROLLER, VALVES AND ALL OTHER COMPONENTS NECESSARY FOR THE SYSTEMS OPERATION.
2. LANDSCAPE AREAS SHALL BE IRRIGATED WITH POP-UP SPRAY, ROTARY IRRIGATION HEADS, AND DRIP IRRIGATION IN SUFFICIENT DENSITY TO COVER THE ENTIRE AREA. PLANTING BEDS AND NATIVE GRASSES TO RECEIVE DRIP IRRIGATION.
3. CONTRACTOR TO AVOID DISTURBANCE OF EXISTING PLANT MATERIAL WHEN LOCATING VALVES AND PIPE LINES. ANY PLANT MATERIAL DAMAGED AS A RESULT OF IRRIGATION INSTALLATION SHALL BE REPLACED AT NO ADDITIONAL COST TO THE OWNER.
4. ALL EXCAVATION MATERIAL SHALL BE PLACED BACK IN TRENCHES.
5. ALL DISTURBED LANDSCAPE AND PAVED AREAS SHALL BE RESTORED TO THE CONDITION FOUND PRIOR TO START OF INSTALLATION.
6. DEPTH OF TRENCHES SHALL BE SUFFICIENT OR PROVIDE A MINIMUM COVER ABOVE THE TOP OF PIPE AS FOLLOWS:
   – 12" OVER NON-PRESSURE LATERAL LINES
   – 18" OVER NON-PRESSURE LATERAL LINES UNDER PAVING
   – 18" OVER CONTROL WIRES
   – 18" OVER MAIN LINE
   – 24" OVER MAIN LINE UNDER PAVING
7. THE IRRIGATION CONTRACTOR IS RESPONSIBLE FOR COORDINATING THE LOCATION OF THE PLUMBING TIE-INS, SLEEVES UNDER PAVEMENTS (AS NECESSARY), AND CONTROL DEVICES WITH THE GENERAL CONTRACTOR, OWNER, AND OWNER'S REPRESENTATIVE.
8. CONTRACTOR TO COORDINATE INSTALLATION OF IRRIGATION SYSTEM WITH EXISTING AND PROPOSED UTILITIES, SITE DRAINAGE SYSTEMS, AND PAVING.
9. CONTRACTOR SHALL PROMPTLY NOTIFY THE OWNER'S REPRESENTATIVE SHOULD ANY UTILITIES, NOT SHOWN ON THE PLANS, BE FOUND DURING INSTALLATION WORK.
10. WATERPROOF ALL WIRE CONNECTORS USING 3M 'DBY' WATERPROOF CONNECTORS OR EQUIVALENT.
11. DRAIN VALVES ARE TO BE PROVIDED AT SUFFICIENT INTERVALS TO PROVIDE COMPLETE DRAINAGE OF ALL PIPING.
12. COORDINATE THE LOCATION OF CONTROLS, IRRIGATION CONTROLLER, AND SOIL MOISTURE SENSORS WITH THE PROJECT MEP AND OWNER PRIOR TO INSTALLATION.
13. IRRIGATION CONTRACTOR SHALL MAKE FIELD ADJUSTMENTS TO IRRIGATION DESIGN WHERE REQUIRED TO PROVIDE 100% COVERAGE OF ALL LANDSCAPE AREAS, AS DESIGNATED ON THIS PLAN.
14. INSTALLATION MUST COMPLY WITH ALL LOCAL CODES AND CONDITIONS.
15. ALL IRRIGATION WORK SHALL BE GUARANTEED FOR 1 YEAR AFTER COMPLETION OF ALL WORK.
16. CONTRACTOR TO PROVIDE THREE (3) COPIES OF AS-BUILTS, SERVICE MANUALS AND INSTRUCTIONS TO THE OWNER OR OWNERS REPRESENTATIVE.
17. ALL SPRINKLER HEADS SHALL BE SET BACK 4" MINIMUM FROM BACK OF ALL CURBS.
18. CONTRACTOR MAY SUBMIT ALTERNATE EQUIVALENT MATERIALS FOR REVIEW AND APPROVAL BY OWNER'S REPRESENTATIVE OR PROJECT LANDSCAPE ARCHITECT.

GENERAL NOTE:

DUE TO GENERAL CONSTRUCTION ACTIVITIES AND ADJACENT SITE COMPACTION REQUIREMENTS, SUBGRADE SOILS WITHIN PROPOSED PLANTING AREAS TEND TO BECOME HIGHLY COMPACTED. IN ORDER TO CREATE A HEALTHY GROWTH MEDIUM TO ALLOW PROPOSED PLANTINGS TO ESTABLISH A VIGOROUS ROOT MASS, THIS SUBGRADE SOIL MUST UNDERGO A RESTORATION PROCESS. IN ADDITION, IMPORTED OR AMENDED EXISTING SOILS SHALL BE MIXED WITH SUBGRADE SOILS WHERE THEY MEET IN ORDER TO CREATE A TRANSITIONAL GRADIENT TO ALLOW FOR PROPER DRAINAGE.

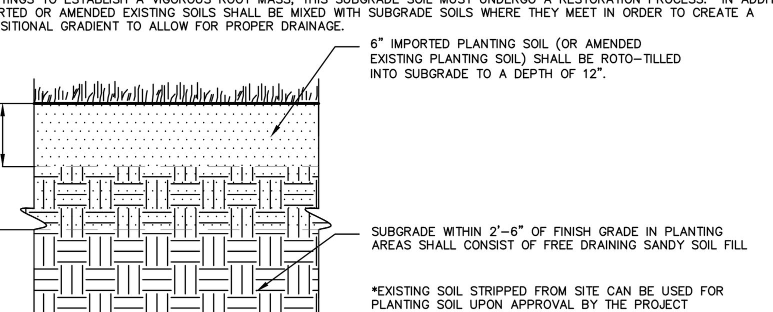

PLANTING SOIL WITHIN AREAS OF CUT OR RAISED GRADE

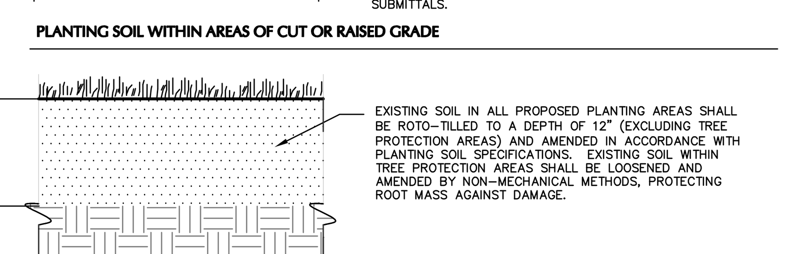

PLANTING SOIL WITHIN AREAS OF UNCHANGED GRADE

NOTES:

1. CONTRACTOR IS RESPONSIBLE TO SEND SAMPLES OF EXISTING SOILS INTENDED FOR USE IN PLANTING AREAS (1 PER 500 CY.) TO TESTING LABORATORY OR UNIVERSITY COOPERATIVE EXTENSION FOR TESTING. ALL TESTING COSTS ARE AT THE CONTRACTOR'S EXPENSE.
2. RECYCLED CRUSHED CONCRETE AND ASPHALT MILLINGS SHALL NOT BE PLACED WITHIN 2'-6" OF FINISH GRADE IN PROPOSED LANDSCAPE AREAS.
3. IMPORTED FILL SHALL CONTAIN NO CONTAMINATION IN EXCEEDENCE OF THE APPLICABLE STATE ENVIRONMENTAL STANDARDS AND MEET THE ENVIRONMENTAL REQUIREMENTS FOR THE PROJECT. THE CONTRACTOR SHALL PROVIDE DOCUMENTATION OF COMPLIANCE PRIOR TO DELIVERY OF ANY FILL TO THE SITE.
4. CONTRACTOR TO LIGHTLY COMPACT ALL PLACED PLANTING SOILS AND RAISE GRADES ACCORDINGLY TO ALLOW FOR FUTURE SETTLEMENT OF PLANTING SOILS (TYP.)
5. NO STONES, WOOD CHIPS, OR DEBRIS LARGER THAN 1/2" SHALL BE ACCEPTABLE WITHIN PLANTING AREAS.

1 PLANTING SOIL

NTS

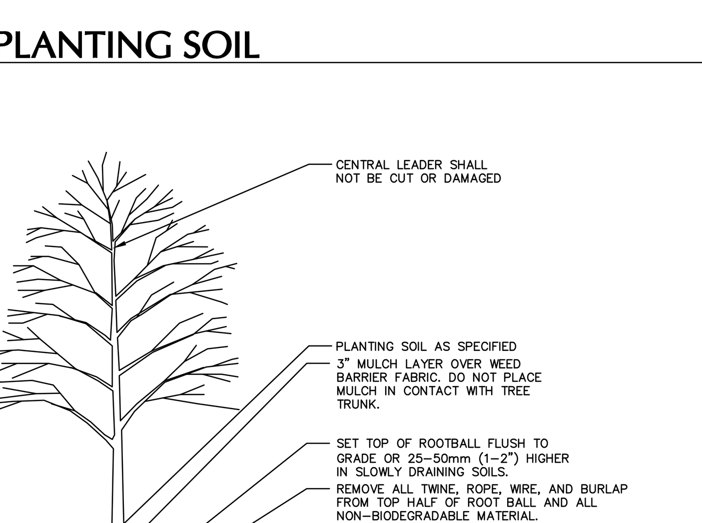

1. PLANT STAKING SYSTEMS INDICATED ARE SHOWN DIAGRAMMATICALLY. CONTRACTOR IS RESPONSIBLE FOR MAINTAINING STAKING SYSTEM AT THEIR DISCRETION TO MAINTAIN PLANTS IN A PLUMB CONDITION.

2 TREE PLANTING

NTS

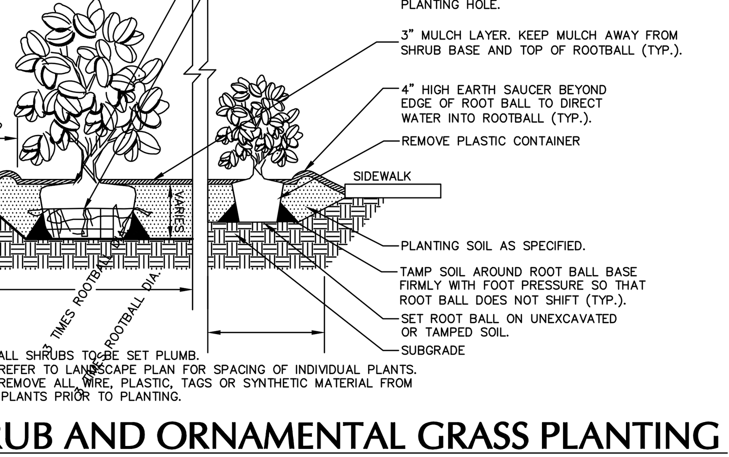

NOTES: 1. ALL SHRUBS TO BE SET PLUMB.
2. REFER TO LANDSCAPE PLAN FOR SPACING OF INDIVIDUAL PLANTS.
3. REMOVE ALL WIRE, PLASTIC, TAGS OR SYNTHETIC MATERIAL FROM PLANTS PRIOR TO PLANTING.

3 SHRUB AND ORNAMENTAL GRASS PLANTING

NTS

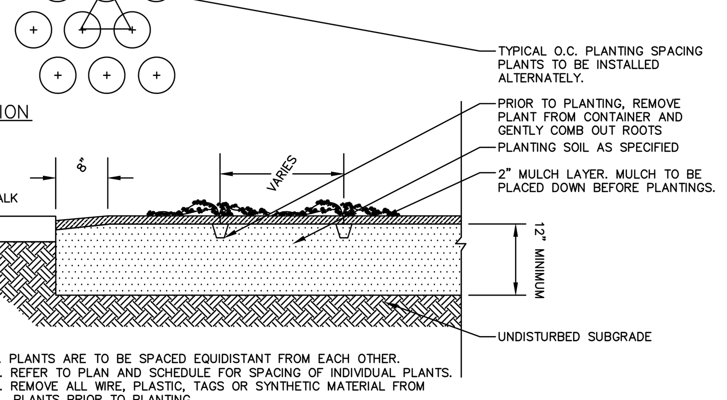

NOTES: 1. PLANTS ARE TO BE SPACED EQUIDISTANT FROM EACH OTHER.
2. REFER TO PLAN AND SCHEDULE FOR SPACING OF INDIVIDUAL PLANTS.
3. REMOVE ALL WIRE, PLASTIC, TAGS OR SYNTHETIC MATERIAL FROM PLANTS PRIOR TO PLANTING.

4 GROUNDCOVER/ PERENNIAL PLANTING

NTS

NOTES: 1. ISLAND AREAS TO BE FREE OF DEBRIS AND RUBBLE PRIOR TO PLANTING OPERATION.
2. MOUND PARKING ISLAND AS SHOWN.
3. REMOVE ALL WIRE, PLASTIC, TAGS OR SYNTHETIC MATERIAL FROM PLANTS PRIOR TO PLANTING.
4. SET PLANTS AT GRADE WHICH IS EVEN WITH ORIGINAL NURSERY GRADE.

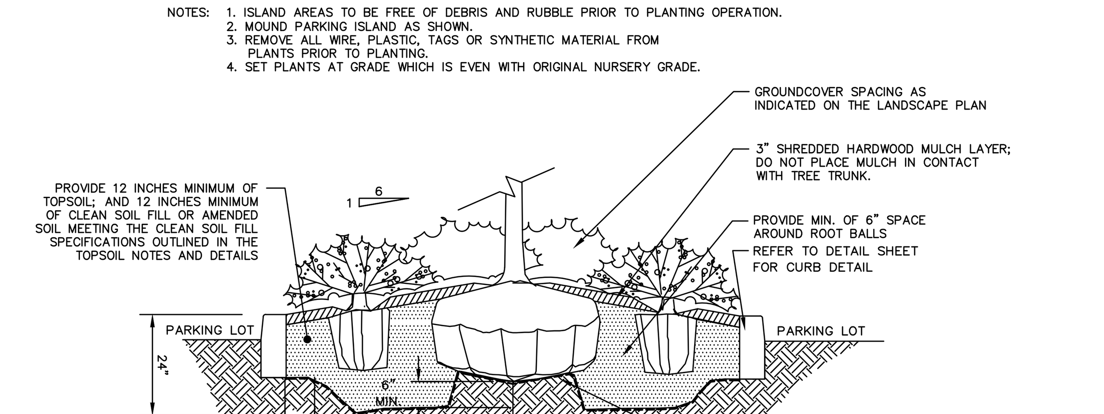

5 PARKING LOT ISLAND PLANTING

NTS

Date	Description	No.

Revisions

Signature Date

LANGAN
Langan Engineering and Environmental Services, Inc.
100 Cambridge Street, Suite 1310
Boston, MA 02114
T: 617.824.9100 F: 617.824.9101 www.langan.com

Project

237 PLEASANT STREET CONCEPT PLANS

FRANKLIN
NORFOLK COUNTY MASSACHUSETTS

Drawing Title

LANDSCAPE NOTES AND DETAILS

Project No. 151019602
Date 09/10/2022
Drawn By SD
Checked By MH
Drawing No. LP501

© 2022 Langan